建材

檔　　號：
保存年限：

內政部　函

地址：10556臺北市松山區八德路2段342號(營建署)
聯絡人：賴玲玲
聯絡電話：02-87712793
電子郵件：lingling@cpami.gov.tw
傳真：02-87712709

受文者：中華民國全國建築師公會

發文日期：中華民國107年1月30日
發文字號：台內營字第1070801763號
速別：普通件
密等及解密條件或保密期限：
附件：如主旨(1071122667_107D2003374-01.pdf、1071122667_107D2003375-01.docx)

主旨：美國商務部頒定之木質結構用板材之使用性標準（Voluntary Product Standard PS 2, Performance Standard for Wood-Based Structural-Use Panels，如附件1），業經本部依木構造建築物設計及施工技術規範，認可為符合框組式構造木質板材之定向粒片之材料標準之一，請查照。

說明：

一、依木構造建築物設計及施工技術規範7.2.4及本部106 年12 月29 日內授營建管字第1060820461號函辦理。

二、本案僅依木構造建築物設計及施工技術規範第7章框組式構造7.2.4認可定向粒片板(OSB)之材料標準，至其他有關防火、結構設計及非屬本規範7.2.4適用範圍者，仍應依建築技術規則、本規範及國家標準規定辦理。

三、按美國在臺協會說明，目前認可PS 2之機構有：1.APA-The Engineered Wood Association、 2.PFS-TECO、3.Timber Products Inspection，其PS 2之認證章樣式如附件2

理事長	會務常務理事	財務常務理事	主委 任委員	秘書長	副秘書長	承辦人

全國建築師公會
收文 107 年 1 月 30 日
第 0238 號

建材

檔　　號：
保存年限：

內政部　函

地址：10556臺北市松山區八德路2段342號(營建署)
聯絡人：賴玲玲
聯絡電話：02-87712793
電子郵件：lingling@cpami.gov.tw
傳真：02-87712709

受文者：中華民國全國建築師公會

發文日期：中華民國107年1月30日
發文字號：台內營字第1070801763號
速別：普通件
密等及解密條件或保密期限：
附件：如主旨(1071122667_107D2003374-01.pdf、1071122667_107D2003375-01.docx)

主旨：美國商務部頒定之木質結構用板材之使用性標準（Voluntary Product Standard PS 2, Performance Standard for Wood-Based Structural-Use Panels，如附件1），業經本部依木構造建築物設計及施工技術規範，認可為符合框組式構造木質板材之定向粒片之材料標準之一，請查照。

說明：

一、依木構造建築物設計及施工技術規範7.2.4及本部106 年12 月29 日內授營建管字第1060820461號函辦理。

二、本案僅依木構造建築物設計及施工技術規範第7章框組式構造7.2.4認可定向粒片板(OSB)之材料標準，至其他有關防火、結構設計及非屬本規範7.2.4適用範圍者，仍應依建築技術規則、本規範及國家標準規定辦理。

三、按美國在臺協會說明，目前認可PS 2之機構有：1.APA-The Engineered Wood Association、 2.PFS-TECO、3.Timber Products Inspection，其PS 2之認證章樣式如附件2

。

正本：6直轄市政府、臺灣省14縣(市)政府、連江縣政府、金門縣政府、特設主管建築機關、玉山國家公園管理處、陽明山國家公園管理處、太魯閣國家公園管理處、雪霸國家公園管理處、金門國家公園管理處、台江國家公園管理處、海洋國家公園管理處、墾丁國家公園管理處、中華民國不動產開發商業同業公會全國聯合會、中華民國營造工程工業同業公會全國聯合會、中華民國土木技師公會全國聯合會、中華民國結構工程技師公會全國聯合會、中華民國全國建築師公會、建築改革社、中華木質構造建築協會、臺灣木結構工程協會

副本：美國在台協會(農業貿易辦事處)、本部建築研究所、營建署(建築管理組)(均含附件)電子公文交換章 2018-01-30 13:43:34

裝

訂

線

Voluntary Product Standard PS 2-10

Performance Standard for Wood-Based Structural-Use Panels

June 2011

U.S. Department of Commerce
Gary Locke, Secretary

National Institute of Standards and Technology
Patrick D. Gallagher, Director

Page left blank on purpose

DEPARTMENT OF COMMERCE (DOC) VOLUNTARY PRODUCT STANDARDS

DOC Voluntary Product Standards are developed under procedures published by the Department of Commerce in Title 15 Code of Federal Regulations Part 10, *Procedures for the Development of Voluntary Product Standards.* The purpose of these standards is to establish nationally recognized requirements for products and to provide all concerned interests with a basis for common understanding of the characteristics of the products. The National Institute of Standards and Technology (NIST) administers the Voluntary Product Standards program on a reimbursable basis.

ROLE OF NIST

The role of NIST in the establishment of a DOC Voluntary Product Standard is to act as an unbiased coordinator in the development of the standard, provide editorial assistance in the preparation of the standard, supply such assistance and review as is required to assure the technical soundness of the standard, and seek satisfactory adjustment of valid points of disagreement. NIST also determines compliance with the criteria of the Department's procedures and publishes the standard as a public document.

Producers, distributors, users, consumers, and other interested groups contribute to the establishment of Voluntary Product Standards. These groups initiate and participate in the development of the standards, provide technical or other counsel as appropriate, promote the use of and support for the standards, and assist in keeping them current with respect to advancing technology and marketing practices.

USE OF VOLUNTARY PRODUCT STANDARDS

The use of DOC Voluntary Product Standards is voluntary. NIST has no regulatory power in the enforcement of their provisions; however, since the standards represent a consensus of all interested groups, their provisions are likely to become established as trade customs. In addition, when a DOC Voluntary Product Standard is made part of a legal document, such as a sales contract or code, compliance with the standard is enforceable.

The benefits derived from a DOC Voluntary Product Standard are in direct proportion to their general recognition and actual use. Producers and distributors whose products meet the requirements of a DOC Voluntary Product Standard may refer to the standard in advertising and on labels to promote greater public understanding for confidence in their products. At times, purchasers may order products conforming to the requirements of a DOC Voluntary Product Standard.

For copies of DOC Voluntary Product Standards or more information concerning the development and use of these standards, contact the Standards Services Division, National Institute of Standards and Technology, 100 Bureau Drive, MS 2150, Gaithersburg, MD 20899-2150; http://ts.nist.gov/docvps.

Abstract

This standard covers performance requirements, adhesive bond performance, panel construction and workmanship, dimensions and tolerances, marking, and moisture content of structural-use panels. Structural-use panels include structural plywood, oriented strand board (OSB), other mat-formed panels and composite panels. The standard classifies panels by bond classification, span rating, performance category and grade. It provides test methods, a glossary of trade terms and definitions, and a quality certification program whereby agencies inspect, sample, and test products for conformance to this standard. Information regarding industry practices for reinspection, a qualification flowchart, history of the standard, labeling and environmental attributes are provided in nonmandatory appendices.

Keywords

Adhesive bond classification; certification; construction sheathing; structural-use panel; dimensions and tolerances; marking; moisture content; oriented strand board; OSB; panel construction; performance requirements; span rating; mat-formed panel; performance category; structural plywood; test methods; voluntary standard; waferboard; wood-based panels.

CONTENTS

SECTION		PAGE
1.	SCOPE	1
2.	TERMINOLOGY	1
3.	REFERENCE PUBLICATIONS	3
4.	CLASSIFICATION	4
5.	REQUIREMENTS	5
6.	QUALIFICATION TESTING AND MILL SPECIFICATION	13
7.	TEST METHODS	19
8.	TRADEMARKING AND CERTIFICATION	36
9.	EFFECTIVE DATE AND IDENTIFICATION	37
10.	STANDING COMMITTEE	37
APPENDIX A	REINSPECTION PRACTICES	38
APPENDIX B	QUALIFICATION FLOWCHART	41
APPENDIX C	HISTORY OF CHANGES	42
APPENDIX D	RECOMMENDED THICKNESS LABELS	45
APPENDIX E	LABELING GUIDELINES	46
APPENDIX F	WOOD STRUCTURAL PANELS AS GREEN BUILDING MATERIALS	51
APPENDIX G	FORMALDEHYDE	53

VOLUNTARY PRODUCT STANDARD PS 2-10

PERFORMANCE STANDARD FOR WOOD-BASED STRUCTURAL-USE PANELS

Effective June 1, 2011

(This standard, initiated by *APA – The Engineered Wood Association,* has been developed under the Procedures for the Development of Voluntary Product Standards for the U.S. Department of Commerce.)

1 SCOPE

1.1 This Voluntary Product Standard primarily establishes structural criteria for assessing the acceptability of wood-based structural-use panels for construction sheathing and single-floor applications and provides a basis for common understanding among the producers, distributors, and the users of these products. The standard does not address non-structural issues such as resistance to biological agents. Applications other than construction sheathing and single-floor sheathing may require additional engineering considerations that are not covered by this document.

1.2 This Standard covers the performance requirements, adhesive bond performance, panel construction and workmanship, dimensions and tolerances, marking and moisture content of structural-use panels.

1.3 This Standard includes test methods to determine compliance and a glossary of trade terms and definitions. A quality certification program is provided whereby qualified testing agencies inspect, sample, and test products for qualification under this Standard. Information regarding industry practices for reinspection is provided in Appendix A. A flowchart depicting the qualification process is provided in Appendix B. Information on the maintenance, history, and current edition of the Standard is provided in Appendix C. Recommended thickness labeling is provided in Appendix D. Information on labeling regulations from NIST Handbook 130 is provided in Appendix E. Information on environmental attributes of structural panels are provided in Appendix F and information on formaldehyde emissions is provided in Appendix G.

1.4 This Standard incorporates the International System of Units (SI) as well as customary units of measurement. The values given in SI units are the standard. The values given in parentheses are for information only. In conversion of customary units where exact placement is not an issue, such as nail spacing, approximate conversions to SI units are made to yield more easily recognizable numbers. In critical matters, such as panel thickness, exact conversions to SI units are made. For nominal customary units, actual dimensions in SI units are given.

1.5 Advisory notes in this Standard shall not be considered mandatory.

2 TERMINOLOGY

2.1 Composite panel

Any panel containing a combination of veneer and other wood-based material.

2.2 Delamination

For plywood or composite panels, delamination is a visible separation between plies or layers that normally receive adhesive at their interface and are firmly contacted in the pressing operation. Wood characteristics, such as checking, leafing, splitting and broken grain, are not to be construed as delamination.

2.3 Furnish

Wood-based material, such as flakes or strands, including applied resin, wax and other additives, as the primary constituent of mat-formed panels.

2.4 Mat-formed panel

Any wood-based panel which does not contain veneer, consistent with the definition of structural-use panels.

2.5 Mill specification

A document that defines product characteristics which affect (or may affect) the classification (Section 4) and/or the performance of the product relative to the requirements of this Standard. The mill specification is unique to each qualified product of a given grade. The specification is used in the mill quality program as audited under third-party inspection.

2.6 Moisture resistant adhesive

Adhesive capable of bonding structural panels in a manner to satisfy the bond classification requirements of this Standard.

2.7 OSB

An acronym for oriented strand board, a type of mat-formed panel with oriented layers resulting in directional properties.

2.8 Performance Category

A panel designation related to the panel thickness range that is linked to the nominal panel thickness designations used in the International Building Code (IBC) and International Residential Code (IRC). For purposes of labeling, as defined in Section 5.2.1.2, abbreviations PERF CAT, CAT or Category are permitted.

2.9 Performance standard

A standard for trademarked products based on performance. Performance is measured by tests that approximate intended end-use conditions.

2.10 Plywood

A conventional all-veneer panel with alternate layers of veneer running perpendicular to one another. For all-veneer panels, a layer is a single veneer ply or two or more adjacent plies with grain direction parallel.

2.11 PS 1

Voluntary Product Standard PS 1-09 "Structural Plywood." Later issues of Voluntary Product Standard PS 1 shall be permitted providing the requirements are applicable and consistent with the issue designated.

2.12 Reference value

The numerical value established for the mill specification for a given mechanical or physical property.

2.13 Sample

A set of specimens analyzed together.

2.14 Sample average

The average test value, obtained by summing the observations and dividing by the number of tests.

2.15 Sample standard deviation

A measure of test variation. Calculated as:

$$S = \sqrt{\frac{\sum x^2 - \frac{(\sum x)^2}{n}}{n-1}}$$

where:

S = sample standard deviation
x = test observation
n = number of observations

2.16 Shop-cutting panel

A panel which has been rejected as not conforming to a panel grade because of deficiencies, other than adhesive bond quality, which prevent it from meeting the requirements of this Standard. Such a panel shall be identified with a separate mark as specified in Section 8.3.1.

2.17 Specimen

The individual test piece.

2.18 Strength axis

The axis parallel to the face and back orientation of the flakes or the grain (veneer), which is generally the long panel direction, unless otherwise marked.

2.19 Structural-use panel

A panel product composed primarily of wood which, in its commodity end use, is essentially dependent upon certain mechanical and/or physical properties for successful end-use performance. Such a product carrying the trademark of a qualified inspection and testing agency shall conform to performance requirements of one or more of the end-uses contained herein and, where applicable, approved by one or more national regulatory agencies for single-layer floors or for sheathing with respect to roofs, subfloors, and walls. Such a panel shall be identified in a manner clearly conveying its intended end use. The term "structural panel" is synonymous with this term. The International Building Code and International Residential Code (see Section 3.2) use the term "wood structural panel" to refer to panels that comply with PS 2.

2.20 Test exposure condition

The exposure condition to which a panel is subjected prior to test. The following terms apply to the panel moisture conditioning used during performance testing:

Dry test condition – Panel moisture content is within +/- 3% of the as-shipped moisture content.

Wet test condition – Panel moisture content upon 3 days of one-sided wetting.

Wet/redry test condition – After 3 days of one-sided wetting, the panel is dried until the panel moisture content is within +/- 3% of the as-shipped moisture content.

As-shipped moisture content – The panel moisture content when the panels are shipped from the panel manufacturer's production facility.

3 REFERENCE PUBLICATIONS

3.1 ASTM standards[1]

- E 72-05 Standard Test Methods for Conducting Strength Tests of Panels for Building Construction

[1] Copies of these publications are available from ASTM International, 100 Barr Harbor Drive, PO Box C700, West Conshohocken, PA 19428-2959, www.astm.org.

- E 661-03 Standard Test Method for Performance of Wood and Wood-Based Floor and Roof Sheathing Under Concentrated Static and Impact Loads
- D 1037-06a Standard Test Methods for Evaluating Properties of Wood-Base Fiber and Particle Panel Materials
- D 1761-06 Standard Test Methods for Mechanical Fasteners in Wood
- D 3043-00 (2006) Standard Test Methods for Structural Panels in Flexure
- D 4442-07 Standard Test Methods for Direct Moisture Content Measurement of Wood and Wood-Base Materials
- D 2915-03 Standard Practice for Evaluating Allowable Properties for Grades of Structural Lumber

3.2 Other documents

- Voluntary Product Standard PS 1-09 – Structural Plywood[2]
- CSA-O325.0-2007 Construction Sheathing[3]
- International Building Code®. International Code Council. Country Club Hills, IL.
- International Residential Code® for One- and Two-Family Dwellings. International Code Council. Country Club Hills, IL.

4 CLASSIFICATION

4.1 General

The structural-use panels covered by this Standard are specified by bond classification, span rating, performance category and grade.

4.1.1 Bond classification

The bond classification is related to the moisture resistance of the glue bond under intended end-use conditions and does not relate to the physical (erosion, ultraviolet, etc.) or biological (mold, fungal decay, insect, etc.) resistance of the panel.

4.1.1.1 Exterior

A bond classification for structural plywood suitable for repeated wetting and redrying or long-term exposure to weather or other conditions of similar severity.

4.1.1.2 Exposure 1

A bond classification for panels suitable for uses not permanently exposed to the weather. Panels classified as Exposure 1 are intended to resist the effects of moisture on structural performance due to construction delays, or other conditions of similar severity.

4.1.2 Grade

This Standard covers grades of structural-use panels designed and manufactured for sheathing, Structural I sheathing, and single-floor applications.

4.1.2.1 Sheathing

A wood-based structural-use panel intended for use in construction applications as covering material for roofs, subfloors, and walls when fastened to supports spaced in accordance with the span rating.

4.1.2.2 Structural I Sheathing

A wood-based structural-use panel consistent with that described in Section 4.1.2.1, except that Structural I panels meet additional requirements in this Standard for cross-panel strength and stiffness and for racking load performance.

---

[2] Copies of the current standard are available from the Superintendent of Documents, U.S. Government Printing Office, Washington, DC 20402 and the Standards Services Division, National Institute of Standards and Technology, 100 Bureau Drive, Stop 2150, Gaithersburg, MD 20899-2150, web site: http://gsi-i.nist.gov/global/index.cfm/L1-5/L2-44/A-355.

[3] Copies of this publication are available from the Canadian Standards Association, 5060 Spectrum Way, Mississauga, ON, Canada L4W 5N6, www.csa.ca.

4.1.2.3 Single Floor

A wood-based structural-use panel intended for use as combination subfloor and underlayment when fastened to supports spaced in accordance with the span rating.

4.1.3 Span rating

An index number, based on customary inch units, that identifies the recommended maximum center-to-center support spacing for the specified end use under normal use conditions. Spans are defined for end uses such as roof, wall, subfloor, and single floor. As a matter of convention, spans are typically specified singly for wall (Wall 24) and single floor (Floor 24 o.c.), while roof and subfloor are often combined in a fractional format. For example, a span rating of 32/16 designates a roof span of 32 inches and a subfloor span of 16 inches.

4.1.4 Performance Category

A panel designation related to the panel thickness range that is linked to the nominal panel thickness designations used in the International Building Code (IBC) and International Residential Code (IRC). For purposes of labeling, as defined in Section 5.2.1.2, abbreviations PERF CAT, CAT or Category are permitted.

5 REQUIREMENTS

5.1 General

Structural-use panels represented as conforming to this Standard shall meet all applicable requirements set forth herein.

5.2 General Requirements

5.2.1 Dimensional tolerances and squareness of panels

5.2.1.1 Size

A tolerance of plus or minus 1.6 mm (1/16 in.) shall be allowed on manufactured length and/or width.

5.2.1.2 Performance Category and Thickness Tolerance

A tolerance of plus or minus 0.8 mm (for metric basis) or 1/32 in. (for English basis) shall be allowed on the trademark-specified Performance Category of 20.5 mm (13/16 in.) and less, and ±5% of the trademark-specified Performance Category for panels thicker than 20.5 mm (13/16 in.), unless a closer tolerance is determined through qualification testing.

Panel thickness shall be measured with a micrometer having 19.1 mm (3/4 in.) (minus 0, plus 1.3 mm [0.050 in.]) diameter anvils. Measurements shall be taken at an applied anvil pressure of not less than 34 kPa (5 psi) or more than 69 kPa (10 psi). The location of the measurements shall be representative of general panel thickness at approximate mid-length along each edge of the panel and the average of the four measurements shall be taken as the thickness of that panel. If a measurement point contains a permissible grade characteristic that affects panel thickness, then the measurement point shall be shifted from that point.

The panel thickness shall conform to Table 1.

TABLE 1. PANEL THICKNESS REQUIREMENTS

PERFORMANCE CATEGORY[2]	Thickness Requirements[1]	
	Minimum Thickness, mm (in.)	Maximum Thickness, mm (in.)
1/4 PERF CAT	5.56 (0.219)	7.14 (0.281)
5/16 PERF CAT	7.14 (0.281)	8.73 (0.344)
11/32 PERF CAT	7.94 (0.313)	9.53 (0.375)
3/8 PERF CAT	8.73 (0.344)	10.32 (0.406)
7/16 PERF CAT	10.32 (0.406)	11.91 (0.469)
15/32 PERF CAT	11.11 (0.438)	12.70 (0.500)
1/2 PERF CAT	11.91 (0.469)	13.49 (0.531)
9/16 PERF CAT	13.49 (0.531)	15.08 (0.594)
19/32 PERF CAT	14.29 (0.563)	15.88 (0.625)
5/8 PERF CAT	15.08 (0.594)	16.67 (0.656)
23/32 PERF CAT	17.46 (0.688)	19.05 (0.750)
3/4 PERF CAT	18.26 (0.719)	19.84 (0.781)
13/16 PERF CAT	19.84 (0.781)	21.43 (0.844)
7/8 PERF CAT	21.11 (0.831)	23.34 (0.919)
1 PERF CAT	24.13 (0.950)	26.67 (1.050)
1-1/8 PERF CAT	27.15 (1.069)	30.00 (1.181)
1-1/4 PERF CAT	30.16 (1.188)	33.34 (1.313)

[1]Thickness requirements are based on a tolerance of ± 0.8 mm (1/32 in.) for panels with Performance Categories of 13/16 and less and ± 5% for panels with Performance Categories greater than 13/16 unless a closer tolerance is determined through qualification testing.

[2] For labeling purposes, abbreviation of "Performance Category" by PERF CAT, CAT or Category is permitted.

5.2.1.3 Squareness and straightness

Panels shall be square within 1.3 mm per lineal meter (1/64 in. per lineal foot) of the longest edge measured along the diagonals. All panels shall be manufactured so that a straight line drawn from one corner to the adjacent corner is within 1.6 mm (1/16 in.) of the panel edge.

5.2.2 Wood materials

5.2.2.1 Veneer

Any wood veneer used as a component of a panel shall be in accordance with the applicable veneer grade and workmanship requirements of Voluntary Product Standard PS 1.

ADVISORY NOTE: Canadian Standard CAN/CSA-O325.0, which is the Canadian counterpart to PS 2, limits maximum size of knots and knotholes to 76 mm (3 in.) as measured across the grain.

5.2.2.2 Other material

Other materials used in panel manufacture shall include particles or fiber produced by breaking down solid wood.

5.2.3 Design and construction

Panels qualifying for a span rating are identified in three classes: plywood panels, composite panels, or mat-formed panels. See Section 2 for definitions of terms. Panels shall qualify on an individual panel construction basis for the grade and span rating upon demonstrated conformance to the appropriate requirements of Section 5.3.

5.3 Performance requirements

Structural-use panels to be trademarked in accordance with this Standard shall pass performance criteria established in three areas: structural performance, physical properties, and adhesive bond performance. Performance requirements listed in Sections 5.3.1, 5.3.2, and 5.3.3 are for all grades of structural-use panels except where noted otherwise.

5.3.1 Structural performance

Panels shall meet the performance requirements of Sections 5.3.1.1 through 5.3.1.4 when tested for each structural condition in accordance with the referenced test procedure. Section 6 details specimen requirements and additional test set procedures.

5.3.1.1 Concentrated loads

Panels shall be tested according to the procedures of Section 7.1 for concentrated static and impact loads. Panels shall conform to the criteria of Table 2 for the grade and span shown on the trademark.

Panels to be identified as Structural I Sheathing and with a Performance Category of 7/16 or larger shall also be tested according to the procedures of Section 7.1, with the framing members parallel to the strength axis direction, except the load shall be applied at panel mid-length. Minimum test panel size shall be 1,220 x 2,440 mm (48 x 96 in.). The framing shall be spaced 610 mm (24 in.) on center (o.c.). The panel ends shall not be supported by framing. Panels shall conform to the criteria of Table 2 for Roof - 24. See Section 6.2.4.2 for additional testing requirements associated with knots and knotholes.

5.3.1.2 Uniform loads

Panels shall be tested according to the procedures of Section 7.2 for uniform loads. Panels shall conform to the criteria of Table 3 for the grade and span shown on the trademark.

Panels to be identified as Structural I Sheathing shall also be tested according to procedures of Section 7.2 with the framing members parallel to the strength axis direction. Minimum test panel size shall be 1,220 x 1,220 mm (48 x 48 in.). The framing shall be spaced 610 mm (24 in.) o.c. The panel ends shall not be supported by framing. Panels shall conform to the criteria of Table 4.

5.3.1.3 Wall racking

Sheathing panels which are rated for wall span 16 or 24 and for roof span 16, 20 or 24 shall be tested according to the procedures of Section 7.3 for wall racking. Panels shall conform to the criteria of Table 5 for the Performance Category shown on the trademark.

Panels to be identified as Structural I Sheathing shall meet the Structural I Sheathing requirements of Table 5 for the Performance Category shown on the trademark, when tested according to the procedures of Section 7.3.

5.3.1.4 Fastener holding

Panels shall be tested according to the procedures of Section 7.4 for fastener holding under lateral and withdrawal loads. Panels shall conform to the criteria of Table 6 for the grade and Performance Category shown on the trademark.

5.3.2 Physical properties

Panels shall meet the performance requirements of Section 5.3.2.1 for each physical property when tested in accordance with the referenced test method. Section 6.2.3 details specimen requirements and additional test set procedures.

5.3.2.1 Dimensional Stability

Panels shall be tested according to one of the following linear expansion test procedures:

a. **Exposure to 50% (±5%) relative humidity; 21°C ±6°C (70°F ±10°F) and vacuum-pressure soak** – Panels shall be tested along and across the strength axis according to the procedures of Section 7.8 for linear expansion from 50% relative humidity to vacuum-pressure soak. The average linear expansion shall be no more than 0.50% as measured according to the test method.

b. **One-sided wetting and relative humidity** – Panels shall be tested according to the procedures of Section 7.9 for linear expansion and thickness expansion (Single Floor only) as measured by one-sided wetting and Section 7.10 for linear and thickness expansion (Single Floor only) as measured by relative humidity exposures. The free panel linear expansion shall be no more than 0.30% along the panel strength axis and 0.35% across the panel strength axis. Thickness swell of Single Floor shall be no greater than 25%.

Table 2. Concentrated static and impact test performance criteria for panels tested according to Section 7.1. (See Section 6.2.2.1 for pass/fail criteria)

End Use – Span Rating	Test Exposure Conditions[a]	Performance Criteria					
		Ultimate Load				Deflection Under 0.89 kN (200 lbf) Load	
		Static		Following Impact[b]			
		kN	lbf	kN	lbf	Mm	in.
Roof - 16	Dry Wet	1.78	400	1.33	300	11.1[c][d]	0.438[c][d]
Roof – 20[f]	Dry Wet	1.78	400	1.33	300	11.9[c][d]	0.469[c][d]
Roof - 24	Dry Wet	1.78	400	1.33	300	12.7[c][d]	0.500[c][d]
Roof - 32	Dry Wet	1.78	400	1.33	300	12.7[c][d]	0.500[c][d]
Roof - 40	Dry Wet	1.78	400	1.33	300	12.7[c][d]	0.500[c][d]
Roof - 48	Dry Wet	1.78	400	1.33	300	12.7[c][d]	0.500[c][d]
Roof - 54	Dry Wet	1.78	400	1.33	300	12.7[c][d]	0.500[c][d]
Roof - 60	Dry Wet	1.78	400	1.33	300	12.7[c][d]	0.500[c][d]
Subfloor - 16	Dry Wet/Redry	1.78	400	1.78	400	4.8[c]	0.188[c]
Subfloor - 20[f]	Dry Wet/Redry	1.78	400	1.78	400	5.6[c]	0.219[c]
Subfloor - 24	Dry Wet/Redry	1.78	400	1.78	400	6.4[c]	0.250[c]
Subfloor - 32	Dry Wet/Redry	2.45	550	1.78	400	5.3[c]	0.207[c]
Subfloor - 48	Dry Wet/Redry	2.45	550	1.78	400	8.0[c]	0.313[c]
Single Floor - 16	Dry Wet/Redry	2.45	550	1.78	400	2.0[e]	0.078[e]
Single Floor - 20[f]	Dry Wet/Redry	2.45	550	1.78	400	2.4[e]	0.094[e]
Single Floor - 24	Dry Wet/Redry	2.45	550	1.78	400	2.7[e]	0.108[e]
Single Floor - 32	Dry Wet/Redry	3.11	700	1.78	400	2.2[e]	0.088[e]
Single Floor - 48	Dry Wet/Redry	3.11	700	1.78	400	3.4[e]	0.133[e]

[a] Wet/redry shall be exposure to three days of continuous wetting, followed by testing dry. Wet conditioning shall be exposure to three days of continuous wetting, then tested wet. Dry shall be within +/- 3% of the as-shipped moisture content.

[b] Impact shall be 102 N•m (75 lbf•ft) for span ratings up to 24, 122 N•m (90 lbf•ft) for 32, 163 N•m (120 lbf•ft) for 40, and 203 N•m (150 lbf•ft) for 48 and greater.

[c] Criteria apply under static concentrated load. They do not apply following impact.

[d] Deflection after wet conditioning not applicable.

[e] Criteria apply under static concentrated load and following impact.

[f] The "20" span rating designation is intended for end-use spans of 19.2 inch.

Table 3. Uniform load performance criteria for panels tested according to Section 7.2. (See Section 6.2.2.2 for pass/fail criteria)

End Use - Span Rating	Test Exposure Conditions[b]	Performance Criteria: Average Deflection Under Load		Ultimate Uniform Load kPa	Ultimate Uniform Load lbf/ft^2
Wall - 16	Dry	Not applicable		3.6[c]	75[c]
Wall - 24	Dry	Not applicable		3.6[c]	75[c]
Roof - 16[a]	Dry	1.7 mm at 1.68 kPa	(0.067 in. at 35 lbf/ft^2)	7.2	150
Roof - 20[a][d]	Dry	2.0 mm at 1.68 kPa	(0.080 in. at 35 lbf/ft^2)	7.2	150
Roof - 24[a]	Dry	2.5 mm at 1.68 kPa	(0.100 in. at 35 lbf/ft^2)	7.2	150
Roof - 32	Dry	3.4 mm at 1.68 kPa	(0.133 in. at 35 lbf/ft^2)	7.2	150
Roof - 40	Dry	4.2 mm at 1.68 kPa	(0.167 in. at 35 lbf/ft^2)	7.2	150
Roof - 48	Dry	5.1 mm at 1.68 kPa	(0.200 in. at 35 lbf/ft^2)	7.2	150
Roof - 54	Dry	5.7 mm at 1.68 kPa	(0.225 in. at 35 lbf/ft^2)	7.2	150
Roof - 60	Dry	6.4 mm at 1.68 kPa	(0.250 in. at 35 lbf/ft^2)	7.2	150
Subfloor - 16	Dry Wet/Redry	1.1 mm at 4.79 kPa	(0.044 in. at 100 lbf/ft^2)	15.8	330
Subfloor - 20[d]	Dry Wet/Redry	1.3 mm at 4.79 kPa	(0.053 in. at 100 lbf/ft^2)	15.8	330
Subfloor - 24	Dry Wet/Redry	1.7 mm at 4.79 kPa	(0.067 in. at 100 lbf/ft^2)	15.8	330
Subfloor - 32	Dry Wet/Redry	2.2 mm at 4.79 kPa	(0.088 in. at 100 lbf/ft^2)	15.8	330
Subfloor - 48	Dry Wet/Redry	3.4 mm at 3.83 kPa	(0.133 in. at 80 lbf/ft^2)	10.8	225
Single Floor - 16	Dry Wet/Redry	1.1 mm at 4.79 kPa	(0.044 in. at 100 lbf/ft^2)	15.8	330
Single Floor - 20[d]	Dry Wet/Redry	1.3 mm at 4.79 kPa	(0.053 in. at 100 lbf/ft^2)	15.8	330
Single Floor - 24	Dry Wet/Redry	1.7 mm at 4.79 kPa	(0.067 in. at 100 lbf/ft^2)	15.8	330
Single Floor - 32	Dry Wet/Redry	2.2 mm at 4.79 kPa	(0.088 in. at 100 lbf/ft^2)	15.8	330
Single Floor - 48	Dry Wet/Redry	3.4 mm at 3.83 kPa	(0.133 in. at 80 lbf/ft^2)	10.8	225

[a] Panels with Roof - 16 and Roof - 20 rating shall also meet performance requirements for Wall - 16 rating. Panels with Roof - 24 rating shall also meet requirements for Wall - 24 rating.

[b] Wet/Redry shall be exposure to three days of continuous wetting, followed by testing dry. Dry shall be within +/- 3% of the as-shipped moisture content.

[c] The panel strength axis shall be placed along the supports for testing, unless otherwise specified.

[d] The "20" span rating designation is intended for end-use spans of 19.2 inch.

Table 4. Uniform load performance criteria for Structural I Sheathing panels tested according to Section 7.2. (Also see Section 5.3.1.2 and Section 6.2.2.2 for pass/fail criteria)

Performance Category	Test Exposure Conditions[a]	Performance Criteria: Average Deflection Under Load		Ultimate Uniform Load kPa	Ultimate Uniform Load lbf/ft^2
7/16	Dry	2.5 mm at 0.96 kPa	(0.100 in. at 20 lbf/ft^2)	4.3	90
15/32	Dry	2.5 mm at 1.68 kPa	(0.100 in. at 35 lbf/ft^2)	6.5	135
1/2	Dry	2.5 mm at 1.92 kPa	(0.100 in. at 40 lbf/ft^2)	7.2	150
19/32 & 5/8	Dry	2.5 mm at 3.35 kPa	(0.100 in. at 70 lbf/ft^2)	11.5	240
23/32 & ¾	Dry	2.5 mm at 4.31 kPa	(0.100 in. at 90 lbf/ft^2)	14.4	300

[a] Dry shall be within +/- 3% of the as-shipped moisture content.

Table 5. Racking load performance criteria for panels tested according to Section 7.3. (See Section 6.2.2.3 for pass/fail criteria)

Performance Category	Test Exposure Condition[b]	Nail Size (dia. x length)		Nail Spacing				Test Load				Performance Criteria[a]					
				Panel Edge		Inter-mediate Studs[c]		Sheathing		Structural I		Deflection @ Test Load		Ultimate Load			
														Sheathing		Structural I	
		mm	in.	mm	in.	mm	in.	kN/m	lbf/ft	kN/m	lbf/ft	mm	in.	kN/m	lbf/ft	kN/m	lbf/ft
Less than 5/16	Dry	2.9 x 51	0.113 x 2.0	150	6	300	12	2.2	150	---	---	5.1	0.2	9.5	650	---	---
								4.4	300	---	---	15.2	0.6				
5/16	Dry	2.9 x 51	0.113 x 2.0	75	3	300	12	5.1	350	---	---	5.1	0.2	14.3	980	---	---
3/8	Dry	3.3 x 64	0.131 x 2.5	75	3	300	12	6.0	410	6.7	460	5.1	0.2	16.8	1150	18.8	1290
7/16	Dry	3.3 x 64	0.131 x 2.5	75	3	300	12	6.6	450	7.4	505	5.1	0.2	18.4	1260	20.7	1415
15/32	Dry	3.8 x 76	0.148 x 3.0	75	3	300	12	8.8	600	9.7	665	5.1	0.2	24.5	1680	27.1	1860
19/32 and greater	Dry	3.8 x 76	0.148 x 3.0	75	3	300	12	9.7	665	9.7	665	5.1	0.2	27.1	1860	27.1	1860

(a) Stud spacing – 405 mm (16 in.) o.c. for Wall-16, Roof-16, and Roof-20; 610 mm (24 in.) o.c. for all other span ratings and all Structural I Sheathing panels.
(b) Dry shall be within +/- 3% of the as-shipped moisture content.
(c) For studs spaced 610 mm (24 in.) o.c., nail spacing on intermediate studs shall be 150 mm (6 in.) o.c. for panels with a Performance Category of 7/16 and less.

Table 6. Fastener performance criteria under lateral and withdrawal loads for panels tested according to Section 7.4. (See Section 6.2.2.4 for pass/fail criteria)									
						Performance Criteria for Ultimate Load[c]			
Grade	End Use	Performance Category	Nail Size[a] (dia. x length)		Test Exposure Condition[b]	Lateral Nail holding		With-drawal	
			mm	in.		N	lbf	N	lbf
Sheathing	Wall	Through 1/2	2.9 x 51	0.113 x 2.0	Dry	778	175	(d)	(d)
		Greater than 1/2	3.3 x 64	0.131 x 2.5	Wet/Redry	600	135	(d)	(d)
	Roof	Through 1/2	2.9 x 51	0.113 x 2.0	Dry	778	175	89	20
		Greater than 1/2	3.3 x 64	0.131 x 2.5	Wet/Redry	600	135	67	15
	Subfloor	Through 1/2	2.9 x 51	0.113 x 2.0	Dry	934	210	89	20
		Greater than 1/2	3.3 x 64	0.131 x 2.5	Wet/Redry	712	160	67	15
Single Floor	Floor	Through 1/2	2.9 x 51	0.113 x 2.0	Dry	934	210	89	20
		Greater than 1/2	3.3 x 64	0.131 x 2.5	Wet/Redry	712	160	67	15

(a) Common smooth-shank nail.
(b) Wet/redry shall be exposure to three days of continuous wetting, followed by testing dry. Dry shall be within +/- 3% of the as-shipped moisture content.
(c) Tabulated values represent the 10th percentile with 75% confidence from 20 specimens.
(d) Not applicable.

Table 7. Exposure 1 Criteria for OSB Tested Along the Strength Axis According to Section 7.6, Cycled According to Section 7.16[a] (See Section 6.2.4.1(d) for pass/fail criteria)			
		Bending Capacity (Required Moment)	
Performance Category	End Use - Span Rating	N-mm/mm	lbf-in./ft
3/8	Roof - 24	310	830
7/16	Roof - 24/Subfloor - 16	350	950
15/32 & 1/2	Roof - 32/Subfloor - 16	380	1,030
19/32 & 5/8	Roof - 40/Subfloor - 20	450	1,210
23/32 & 3/4	Roof - 48/Subfloor - 24	640	1,720
9/16	Single Floor - 16	390	1,060
19/32 & 5/8	Single Floor - 20	420	1,130
23/32 & 3/4	Single Floor - 24	610	1,650
7/8 & 1	Single Floor - 32	1,000	2,690
1-1/8	Single Floor - 48	1,140	3,060

[a] Bond performance may also be established using procedures defined in Section 6.2.4.1.e.

5.3.3 Bond performance

Panels shall meet the performance requirements of Sections 5.3.3.1 through 5.3.4.3 for properties that affect the adhesive bonding system when tested in accordance with the referenced test method. Section 6.2.4 details specimen requirements and additional test set procedures.

5.3.3.1 Bond classification

Structural-use panels shall meet the bond requirements listed below for their respective exposure bond classification.

a. **Exterior Plywood** – Plywood rated as Exterior shall meet PS 1 bond requirements for Exterior panels. Exterior delamination in plywood is a visible separation at a single glueline that exceeds 19.4 cm^2 (3 $in.^2$) in an area coinciding with open knotholes, pitch pockets, splits, gaps and other voids or characteristics permitted in the panel grade.

b. **Exposure 1 Plywood** – Plywood rated as Exposure 1 shall meet PS 1 bond requirements for Exposure 1. Exposure 1 delamination in plywood is a visible separation in any glueline that exceeds 19.4 cm^2 (3 $in.^2$) except where directly attributable to characteristics permitted in the grade as follows:

   - Knots and knotholes – not to exceed the size permitted in the grade plus a surrounding band not wider than 19.1 mm (3/4 in.).
   - Other permissible grade characteristics – not to exceed the size permitted in the grade.

c. **Exposure 1 Composite panels** - Composite panels rated as Exposure 1 shall satisfy the delamination requirements of Section 6.2.4.1.c when tested in accordance with Section 7.13, following moisture cycling according to Section 7.17. Exposure 1 delamination in composites is a visible separation along a test specimen edge and/or end, between veneer-to-veneer or veneer-to-wood-based material gluelines, not to exceed 6.4 mm (1/4 in.) depth for a continuous length of 25 mm (1 in.).

d. **Exposure 1 OSB** – OSB panels rated as Exposure 1 shall meet or exceed the criteria in Table 7 when tested in accordance with method Section 7.6 following moisture cycling according to Section 7.16 or the procedures of Section 5.3.3.1.e.

   ADVISORY NOTE: Values in Table 7 were based on properties from representative industry panels that met requirements for structural performance when tested in accordance with Section 6.2.2.1 and bond performance when tested in accordance with Section 7.7 following moisture cycling according to Section 7.17.

e. **Exposure 1 mat-formed panels** - Mat-formed panels and wood-based material for composite panels rated as Exposure 1 shall exhibit a minimum average strength retention of 50% with no individual panel retained strength less than 40% when tested in accordance with Section 7.7 following moisture cycling according to Section 7.17.

5.3.3.2 Bond performance associated with knots and knotholes

Structural-use plywood rated as Exposure 1 shall satisfy the requirements of Section 6.3.4.4 when tested in accordance with Sections 7.18 and 7.19.

5.3.4 Adhesive performance

5.3.4.1 Adhesive mold resistance

Panel adhesive bonds shall satisfy the mold resistance test according to the procedures of Section 7.14 as defined in Section 6.2.5.1. Phenolic and isocyanate-based adhesives have demonstrated resistance to attack from mold and shall be considered as meeting this requirement.

5.3.4.2 Adhesive resistance to elevated temperature

Panel adhesive bonds shall be considered to satisfy sufficient elevated-temperature resistance (71°C [160°F]) when they meet the requirements of Section 5.3.3.1.

5.3.4.3 Adhesive bacteria resistance

Panel adhesive bonds shall satisfy the bacteria test according to the procedures of Section 7.15 as defined in Section 6.2.5.3. Phenolic and isocyanate-based adhesives have demonstrated resistance to attack from bacteria and shall be considered as meeting this requirement.

5.4 Moisture content

Moisture content of panels at time of shipment from the manufacturer and at the time of testing shall be less than 16% as determined by Section 7.11.

6 QUALIFICATION TESTING AND MILL SPECIFICATION

6.1 General

This section details test specimen requirements, conformance criteria, additional test set options, and mill specifications. See Appendix B for a flowchart.

6.2 Qualification testing

6.2.1 General

Qualification tests are a function of the panel grade. Required tests and performance criteria are detailed in Section 5. Conformance criteria and additional test set requirements are given by test in this section.

Panels for qualification testing shall be representative of minimum performance.

Tests shall be conducted according to the application specifications of the manufacturer and the use for which the panel is being qualified, at the support spacing to be shown on the trademark. Any special product modification which affects performance (e.g., moisturizing or water repellent treatment) shall be noted per Section 6.3. Upon failure of qualification tests, provisions shall be followed for one additional series of tests provided no change has been made in the manufacturing process. If a product satisfies the provisions of the additional testing, it shall pass the performance qualification test in question. If it does not, the product shall fail the performance qualification test. If a change in panel configuration or processing has been made, additional qualification tests shall be performed when required by the qualified testing agency.

6.2.2 Structural performance

6.2.2.1 Concentrated loads

Test a maximum of 20 specimens taken from at least 10 panels. Ten specimens (taken from at least five panels) for each test exposure condition shall be evaluated for both concentrated static and impact loads according to Section 7.1. Requirements are found in Table 2. If additional tests are needed, they shall also consist of 10 specimens, and the results of the two 10-specimen sets shall be combined. Only one additional test set is allowed. If the combined results meet or exceed the minimum passing rate, the sample passes.

a. **Deflection** – The initial test set consists of 10 specimens.

- The average deflection shall not be greater than the appropriate requirement in Table 2.
- If no more than one value is above the requirement, the sample passes.
- If two or three values are above the requirement, test an additional set.
- If four or more values are above the requirement, the sample fails.
- If ten additional specimens are tested, the combined passing rate shall be at least 85%.

b. **Ultimate load** – The initial test set consists of 10 specimens.

- The average load shall not be less than the appropriate requirement in Table 2.
- If all of the values meet or exceed the requirement, the sample passes.
- If one of the values is below the requirement, test an additional set.
- If two or more values are below the requirement, the sample fails.
- If ten additional specimens are tested, the combined passing rate shall be at least 95%.

6.2.2.2 Uniform loads

Test a maximum of 20 specimens taken from at least 10 panels. Ten specimens (taken from at least five panels) for each test exposure condition shall be evaluated for uniform-load capacity according to Section 7.2. Test requirements are found in Table 3 and Table 4 (Structural I). If additional tests are needed, they shall also consist of 10 specimens, and the results of the two 10-specimen sets shall be combined. Only one additional test set is allowed. If the combined results meet or exceed the minimum passing rate, the sample passes.

a. **Deflection** – The average deflection shall not be greater than that specified. The initial test consists of 10 specimens.

- If the average value is below the requirement, the sample passes.
- If the average value is above the requirement, test an additional set.
- If the average value based on combined results is above the requirement, the sample fails.

b. **Ultimate load** – The initial test consists of 10 specimens.

- The average load shall not be less than the appropriate requirement in Table 3.
- If all of the values meet or exceed the requirement, the sample passes.
- If one of the values is below the requirement, test an additional set.
- If two or more values are below the requirement, the sample fails.
- If ten additional specimens are tested, the combined passing rate shall be at least 95%.

6.2.2.3 Wall racking

Two wall assemblies shall be evaluated for wall racking according to Section 7.3. Requirements are found in Table 5. If an additional test is needed, it shall consist of one wall assembly, and the results of the three tests shall be combined. Only one additional test is allowed.

a. **Deflection** – The average deflection shall not be greater than that specified (Table 5). The initial test shall consist of two samples.

- If the average value is below the requirement, the sample passes.
- If the average value is above the requirement, test one additional wall assembly.
- If the average value based on combined results is above the requirement, the wall evaluation fails.

b. **Ultimate load** – The minimum passing rate shall be 100%. The initial test shall consist of two samples. If only two walls are tested, the ultimate loads shall be within 10% of each other.

- If either of the two test values is below the requirement, the sample fails.
- If the two test values meet the requirement but do not agree within 10%, test one additional wall assembly. The lower of the two test values shall be used to calculate the 10% allowance.
- If the lowest value of the three walls tested exceeds the specified minimum ultimate load, the wall evaluation passes.

6.2.2.4 Fastener holding

Test a maximum of 40 specimens taken from at least 20 panels. Twenty specimens (taken from at least 10 panels) for each test exposure condition and property shall be tested for lateral and withdrawal loads according to Section 7.4. Requirements are found in Table 6. If additional tests are needed, they shall also consist of 20 specimens, and the results of the two 20-specimen sets shall be combined. Only one additional test set is allowed.

Ultimate load – The initial test consists of 20 specimens.

- If no more than two values are below the requirement, the sample passes.
- If three or four values are below the requirement, test an additional set.
- If five or more values are below the requirement, the sample fails.
- If 20 additional panels are tested, the combined passing rate shall be at least 90%.

6.2.3 Dimensional stability

One of the following linear expansion test methods and associated criteria shall be satisfied as noted for the grade in Section 5.3.2.1. Any special feature included by the manufacturer, such as coatings or moisture conditioning, shall be stated for Section 6.3.

a. **Exposure to 50% (±5%) relative humidity; 21°C ±6°C (70°F ±10°F) and vacuum-pressure soak** – A minimum of 10 specimens (taken from at least 5 panels) both along and across the panel strength axis shall be conducted according to Section 7.8 for linear expansion measured from 50% relative humidity to vacuum-pressure soak.

The average linear expansion from each panel axis, as measured according to the test method from 50% relative humidity to vacuum-pressure soak, shall be no greater than specified.

Additional tests – If the average linear expansion exceeds 0.55%, the test fails. If the average linear expansion fails to meet the linear expansion requirement and is no greater than 0.55%, another lot of 10 specimens for a given panel axis shall be permitted. If the combined average of all the specimens meets the specified criteria, the requirement shall be considered satisfied.

b. **Exposure to one-sided wetting and relative humidity** – Test a maximum of 20 specimens taken from at least 10 panels. Ten specimens (taken from at least 5 panels) for both along and across the panel strength axis shall be evaluated for linear and/or thickness expansion measured from as-received to wet-one-side exposure according to Section 7.9. Ten specimens (taken from at least 5 panels) for both along and across the panel strength axis shall be evaluated for linear and/or thickness expansion measured when exposed to relative humidity change according to Section 7.10.

Each panel axis is evaluated separately. The initial test consists of 10 specimens. If additional test sets are needed, they shall also consist of 10 specimens, and the results of the two 10-specimen sets shall be combined. Only one additional test set is allowed. If the combined results meet or exceed the minimum passing rate, the sample passes.

- If no more than three values are above the requirement, the sample passes.
- If four, five or six values are above the requirement, test an additional set.
- If seven or more samples are above the requirement, the sample fails.
- If ten additional specimens are tested, the minimum passing rate is 70%.

6.2.4 Bond performance

6.2.4.1 Bond classification

Bond classification performance tests shall be conducted as follows:

a. **Exterior Plywood** – Plywood rated as Exterior shall satisfy PS 1 bond requirements for Exterior panels.

b. **Exposure 1 Plywood** – Plywood rated as Exposure 1 shall satisfy PS 1 bond requirements for Exposure 1.

c. **Exposure 1 Composite panels** – Composite panels rated as Exposure 1 shall have one sample (of at least five specimens) from each of at least 20 panels tested according to Section 7.17 and evaluated for delamination according to Section 7.13 following the fourth and sixth moisture cycles. At least 95% of the samples shall pass four moisture cycles, and 90% shall pass six moisture cycles. If more than 85% but fewer than 90% of the samples pass delamination requirements following the six-cycle test of Section 7.17 and evaluated according to Section 7.13, one additional test set of 20 samples shall be permitted. If the additional test results meet the requirements, bond performance requirements shall be considered satisfied.

d. **Exposure 1 OSB** – OSB shall satisfy the requirements of this section or the requirements of Section 6.2.4.1.e. To satisfy the requirements of this section, OSB rated as Exposure 1 shall have one sample (of at least two specimens) from each of at least 20 panels tested for parallel strength according to Section 7.6 after cycling according to Section 7.16. If no more than one of the samples is below the minimum criterion in Table 7, the 20-panel test set shall be considered passing. If four or more samples fall below the minimum requirement, the test set shall be considered failing. If two or three of the samples are below the minimum criterion, an additional test set of 20 samples from the same lot shall be allowed. The combined passing rate of the 40-panel test set shall be 92.5% or greater.

e. **Exposure 1 mat-formed panels** – Mat-formed panels rated as Exposure 1 shall have one sample (of at least five specimens) from each of at least 20 panels cycled according to Section 7.17 and tested for strength retention according to Section 7.7. Strength retention is calculated by the following method:

$$\%\,RS = \frac{P_t}{P_c} \times 100$$

where % RS = Percent retained strength of sample.
P_t = Average of five-specimen breaking load after cycling.
P_c* = Average unexposed sample (five-specimen) breaking load.

*Unexposed (control) specimens are broken in the as-received condition.

Samples tested shall exhibit the specified minimum strength retention following six moisture cycles.[4]

Additional tests - If the 20-sample average strength retention meets the requirements, but no more than one sample fails to meet the minimum individual strength retention specified, an additional test of 20 samples (one sample from each of 20 panels) shall be permitted. The combined passing rate of the 40-panel test set shall be 97.5% or greater.

6.2.4.2 Bond performance of plywood with knots and knotholes

Structural-use plywood rated as Exposure 1 shall be tested according to Sections 7.18 and 7.19. Knots and/or knotholes in the samples tested shall be greater than 51 mm (2 in.) but not exceeding 76 mm (3 in.) in width measured across the grain. Twenty samples with knots and/or knotholes shall be tested according to Section 7.18 and 20 according to Section 7.19.

Samples with knots and/or knotholes tested according to Section 7.18 shall meet dry concentrated static and impact requirements, conformance criteria and additional test set options of Table 2 and Sections 6.2.2.1.(a) and 6.2.2.1.(b). For each lot of 20, 95% of the samples with knots and/or knotholes tested according to Section 7.19 shall not exhibit delamination extending radially more than 19.1 mm (3/4 in.) beyond the boundary of the knot or knothole and across the width of a full sector or the continuous equivalent of the width of a full sector as measured by Section 7.19.4.

Additional tests – If no more than two samples with knots or knotholes in a lot of 20 fail to meet the test requirements, another lot of 20 tests for that requirement shall be permitted. If all specimens pass the additional tests, the requirements shall be considered satisfied.

6.2.5 Adhesive performance

6.2.5.1 Adhesive mold resistance

Four panels shall be tested according to the procedures of Section 7.14.

a. Plywood shall be considered to have satisfactory adhesive mold resistance if each test group (see Section 7.14.2 for group definition) over the 20-week period shows an average glueline shear load of at least 90% of the control. In addition, no more than two groups shall rate less than 80%, and no single group shall rate less than 75%.

b. Other panels shall be considered to have satisfactory mold resistance if no test group average is less than the control sample average minus 1.8 times the control sample standard deviation.

6.2.5.2 Adhesive resistance to elevated temperature

Adhesives satisfying the moisture-cycling requirements of Section 6.2.4.1 shall be considered to have satisfactory resistance to elevated temperature.

6.2.5.3 Adhesive resistance to bacteria

At least four panels shall be tested according to procedures of Section 7.15.

---

[4] Because of the extreme severity of the six-cycle test, the strength retention requirement relates to bond performance and does not relate to structural design values.

a. Plywood shall be considered to have adhesive bacteria resistance if each test group (see Section 7.15.2 for group definition) over the 12-week test shows an average load of at least 80% of the control. No single group shall rate below 70% of the control.

b. Other panels shall be considered to have satisfactory bacteria resistance if no test group average is less than the control sample average minus 1.8 times the control sample standard deviation.

6.3 Mill specification

When a product passes the appropriate performance qualification tests of Section 6.2, a proprietary mill specification unique to the product and mill shall be written based on product evaluation under this section.

The product evaluation shall be based on values developed in this Standard and unique characteristics of the same materials supplied by the manufacturer for performance qualification testing. Reference values (see Section 2.10) shall be established during product evaluation or from applicable performance requirements in this Standard (Section 5) and shall be the basis for quality evaluation of future production. Reference values for mechanical properties may be based on Sections 6.3.2.1 or 6.3.2.2. Minimum industry reference values for small bending tests are found in Tables 7 and 8. Mill specific small bending values based on Section 7.6 or mill specific 1" x 5" bending reference values based on Section 7.7 may be determined based on certification agency approved methods. For plywood and composite panels, the grade and construction requirements are permitted for use in lieu of reference values for quality evaluation purposes. These values or characteristics will be used by both the individual mill quality procedures and by an inspection program of a qualified inspection and testing agency (see Section 8.2) in conjunction with its policies.

In addition to the panel characteristics specifically evaluated in this section, any unique manufacturing techniques which influence product qualification shall be included in the individual mill specification. This includes special coatings; heat, water or chemical treatments; overlays; additives; or other manufacturing-related activities. In addition, the maximum size knot or knothole tested according to Section 6.2.4.2 shall be included in the mill specification.

6.3.1 Panel construction

6.3.1.1 Plywood panels

Panels shall be defined as to species and veneer construction for the mill specification and evaluated under Sections 6.3.2 and 6.3.3, but excluding Section 6.3.3.2.

6.3.1.2 Composite panels

Wood-based material shall be evaluated as required in Sections 6.3.2, 6.3.3.1 and 6.3.4. In addition, the finished (veneered) panel shall be evaluated by the provisions of Sections 6.3.2, 6.3.3.1, 6.3.3.3 and 6.3.4.

6.3.1.3 Mat-formed panels

Mat-formed panels shall be evaluated under the provisions of Sections 6.3.2, 6.3.3 and 6.3.4.

6.3.2 Mechanical properties

6.3.2.1 Large-panel bending stiffness and strength

Twenty tests (specimens taken from at least 10 panels) shall be evaluated for bending stiffness both along and across the panel strength axis according to the procedures of Section 7.5.

Stiffness reference values for each panel direction shall be the lower value of a 90% confidence interval established on the average.

Strength reference values for each panel direction shall be the minimum observed value, or the sample average minus 1.8 times the sample standard deviation, whichever is the higher value.

6.3.2.2 Small specimen bending stiffness and strength

For OSB and other mat-formed panels, 20 samples (of at least 2 specimens) taken from at least 10 panels shall be evaluated for dry bending strength and stiffness both along and across the panel strength axis according to the procedures of Section 7.6.

Reference values for Quality Assurance for OSB are found in Table 8.

ADVISORY NOTE: Reference values in Table 8 are based on properties and statistical limits from representative industry samples that were tested for and met structural performance requirements in Section 6.2.2.1 and Table 2. Reference values for other mat-formed panels should be based on the statistical principles in Section 6.3.4.2.

Table 8. Quality assurance minimum reference values for dry small specimen bending stiffness and strength, using Section 7.6, small static bending test[a][c]

End Use - Span Rating or Performance Category	BENDING STIFFNESS, EI x 10^3				BENDING STRENGTH, MM			
	Stress Applied Parallel to Strength Axis[b]		Stress Applied Perpendicular to Strength Axis[b]		Stress Applied Parallel to Strength Axis [b]		Stress Applied Perpendicular to Strength Axis[b]	
	N-mm^2/mm	lbf-in.^{2}/ft width	N-mm^2/mm	lbf-in.^{2}/ft width	N-mm/mm	lbf-in./ft width	N-mm/mm	lbf-in./ft width
Sheathing								
Roof – 24	292	31	85	9	330	880	130	350
Roof - 24/Subfloor -16	395	42	94	10	390	1,040	140	370
Roof - 32/Subfloor - 16	490	52	113	12	460	1,250	190	520
Roof - 40/Subfloor - 20	1,240	132	358	38	810	2,170	360	970
Roof - 48/Subfloor - 24	1,790	190	763	81	920	2,480	510	1,380
Structural I								
3/8	292	31	85	9	330	880	130	350
7/16	395	42	141	15	390	1,040	220	580
15/32	490	52	245	26	460	1,250	320	860
½	490	52	273	29	460	1,250	330	900
19/32 & 5/8	1,240	132	471	50	810	2,170	500	1,360
23/32 & 3/4	1,790	190	716	76	920	2,480	650	1,760
Single Floor								
Single Floor - 16	876	93	198	21	650	1,740	230	630
Single Floor - 20	1,110	118	264	28	710	1,910	240	650
Single Floor - 24	1,600	170	546	58	910	2,450	320	850
Single Floor - 32	4,170	443	1,270	135	1,570	4,240	600	1,610
Single Floor - 48	8,660	920	2,110	224	2,080	5,600	820	2,200

[a] Test criteria shall not be used for design properties.
[b] The strength axis is parallel to the face and back orientation of the flakes or strands unless otherwise indicated.
[c] Other reference values may be established through acceptable performance based on procedures in Section 6.2.2.1.

6.3.3 Physical properties

6.3.3.1 Panel thickness

Finished panel thickness shall be evaluated on each of 20 panels by the procedures of Section 7.12. The reference value shall be the average less 1.932 standard deviations for 20 panels (the 95% lower tolerance limit at 75% confidence based on ASTM D-2915).

6.3.3.2 Moisture content

Panel moisture content shall be measured on one specimen from each of 20 panels according to Section 7.11. The reference value shall be the maximum panel moisture content. A reference value shall be established only if necessary under dimensional stability performance testing per Section 6.2.3.

6.3.3.3 Linear expansion

Reference values for linear expansion are to be based on specimens taken from at least 20 panels per the instructions in either Procedure A or Procedure B of Section 7.8. If the average linear expansion based on Procedure A exceeds 0.5%, reference values shall be based on specimens taken from 20 panels evaluated using Section 7.8.2.1. The reference value shall be the highest observed value, or the sample average plus 1.8 times the sample standard deviation, whichever is the lower value. If Procedure B is used, the reference value shall be 0.5%.

For composite panels and for mat-formed panels containing non-oriented furnish, one specimen 75 x 300 mm (3 x 12 in.) shall be prepared perpendicular to the machine direction only from each panel to be tested.

For OSB and other mat-formed panels containing oriented furnish, one 75 x 300 mm (3 x 12 in.) specimen parallel and one perpendicular to the panel strength axis shall be prepared from each panel to be tested. Separate parallel and perpendicular reference values shall be determined when using Section 7.8.2.1 Procedure A.

6.3.4 Adhesive bond properties

6.3.4.1 Exposure 1 bond performance for OSB

The reference values for an OSB mill specification shall be established based on 20 samples evaluated parallel to the strength axis according to Section 7.6 after cycling according to Section 7.16, or based on procedures as described in Section 6.3.4.2 or based on the tabulated values in Table 7.

6.3.4.2 Exposure 1 bond performance for composites and mat-formed panels.

For composite and mat-formed panels classified Exposure 1, a minimum of 20 samples, one taken from each of 20 panels, shall be moisture cycled according to the procedures of Section 7.16 (single cycle soak-dry test) using specimens described in Section 7.7. For composite and mat-formed panels classified Exposure 1, a minimum of 20 samples, one taken from each of 20 panels, shall be moisture cycled according to the procedures of Section 7.17 (6-cycle test) using specimens described in Section 7.7. Immediately after cycling, composite samples will be evaluated for delamination based on procedures described in Section 7.13. Moisture-cycled samples shall then be tested according to the procedures of Section 7.13. The individual panel reference value for each qualification shall be the lowest observed breaking load (5-specimen average) or the sample average minus 1.8 times the sample standard deviation, whichever is the higher value. In addition, for Exposure 1 panels tested according to Sections 7.16 and 7.7, the lower 90% confidence interval shall be established on the qualification average.

6.3.4.3 Exposure 1 bond performance of plywood panels

Reference values for bond performance of Exposure 1 plywood panels shall be as specified in Section 6.2.4.1.(b).

6.3.4.4 Bond performance associated with knots and knotholes

Reference values for bond performance associated with knots and knotholes shall be as specified in Section 6.2.4.2 for knots and knotholes tested according to Section 7.19.

ADVISORY NOTE: Assessment of bond performance associated with knots and knotholes on a quality auditing basis should be conducted when a maximum-sized knot or knothole appears in the routine bond performance samples. When available, they should be tested according to Section 7.19 and meet the criteria of Section 6.2.4.2.

7 TEST METHODS

7.1 Concentrated static and impact load test

ASTM E-661 shall be followed except as modified in these sections.

The test span shall be 19.2 inch for the span rating of 20.

The dry test condition shall be within +/- 3% of the as-shipped moisture content. The wet test condition shall be exposure to three days of continuous one-sided wetting, then tested wet. The wet/redry condition shall be exposure to three days of continuous one-sided wetting, followed by drying. The panel moisture content at the time of testing for the wet/redry condition shall be within +/- 3% of the as-shipped moisture content.

7.1.1 Specimen preparation

ASTM E-661 shall be followed with regard to specimen preparation, and Section 6.2.2.1 of PS 2 shall be followed with regard to the number of specimens required. Specimens shall also be moisture cycled as required.

7.1.2 Test procedure

Concentrated static – Procedures of ASTM E-661 shall be followed, except that a test frame of steel rather than lumber, using fasteners that simulate nails, shall be permitted. During measurement of deflection, the loading rate shall be 445 N (100 lbf) per 30 seconds. Following measurement of deflection, the rate of loading shall yield failure within 5 minutes if a hand-pumped hydraulic loading system is used.

Concentrated impact – Procedures of ASTM E-661 Method A shall be followed, except:

1. A test frame of steel rather than lumber, using fasteners that simulate nails, shall be permitted.
2. For span ratings greater than 24, the shot bag shall weigh 27 kg (60 lbs).

The width of individual test pieces shall be at least 610 mm (24 in.) for span ratings up to 24, and 1,220 mm (48 in.) for greater span ratings.

7.2 Uniform load test

7.2.1 General

This method covers a procedure for determining the performance of structural-use panels under uniform loads such as snow, wind and occupancy loads. The uniform load shall be applied by drawing a vacuum under the test specimen. This causes atmospheric pressure to apply a uniform load to the test specimen. The specimen shall be mounted on fully supported framing members in a vacuum chamber.

7.2.2 Equipment

Vacuum chamber – The vacuum chamber (Figures 1 and 2) shall consist of a sealed box with the panel to be tested forming the top. A 0.15-mm (6-mil) polyethylene sheet or equivalent, the perimeter of which shall be attached securely with tape, shall seal the top surface of the vacuum chamber. The chamber shall be strong and rigid to resist the applied load without failure or excessive deformation. A vacuum pump shall be used to reduce the air pressure under the specimen. The load shall be measured with absolute pressure gages for electronic data readout, but manometers or vacuum gages shall also be permitted.

Joist supports – The framing members shall be supported so as to resist deflection or rotation under applied load.

Deflection gages – The deflection gages shall be mounted to rigid tripods whose legs shall rest above the joists. Deflection shall be measured to the nearest 0.025 mm (0.001 in.).

7.2.3 Specimen preparation

Samples selected shall be representative of the product being tested.

Length – The specimen length perpendicular to the framing members shall be equal to twice the center-to-center spacing.

Width – The specimen width shall be at least 595 mm (23.5 in.).

Thickness – The specimen thickness shall be measured and recorded after conditioning.

Conditioning – Prior to testing, specimens shall be conditioned as specified in Table 3.

7.2.4 Test procedure

Following preparation of specimens in Section 7.2.3, the specimen to be tested shall be mounted on framing members in the vacuum chamber at the spacing for which the panel is being rated, following the specified nail size and spacing. The top of the vacuum chamber shall then be sealed with the polyethylene sheet, and the tripod holding the deflection gages shall be set in its proper position with the gages positioned to read deflection at the point of maximum deflection[5] within the two outer spans (Figures 3 and 4).

---

[5] The point of maximum deflection for a uniformly loaded two-span system occurs at 0.4215 times (S) measured from the centerline of the outer joist, where S equals the center-to-center joist spacing.

Figure 1. Vacuum Test Chamber Equipment

Diagram shows strength axis across supports.

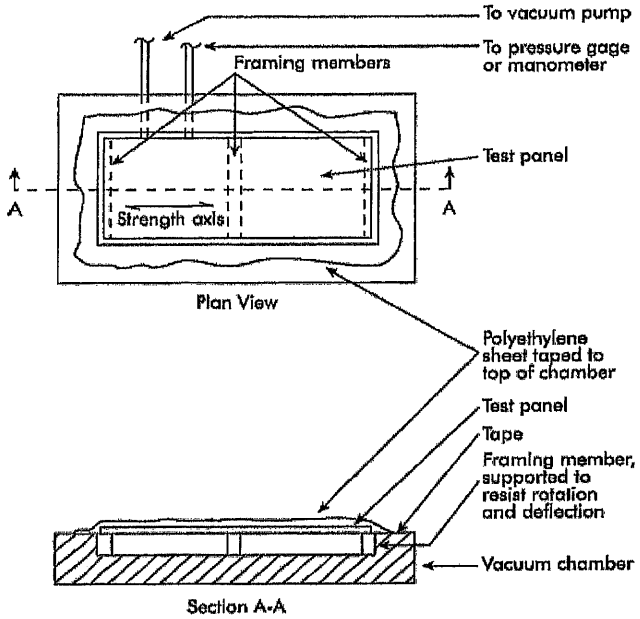

Figure 2. Vacuum Test Chamber Equipment

Diagram shows strength axis parallel to supports.

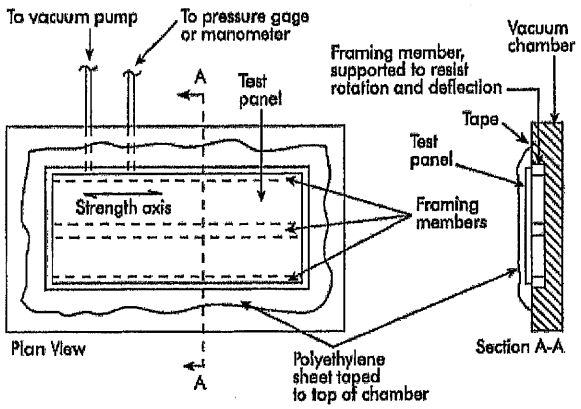

Figure 3. Uniform Load Test Specimen

Diagram shows Strength axis across supports.

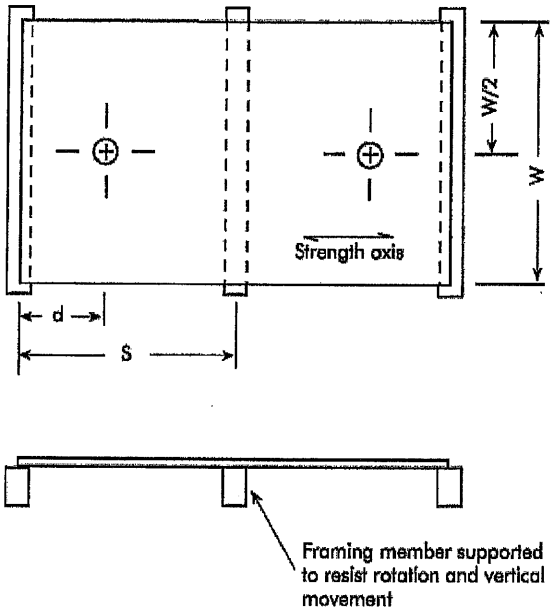

S = Center-to-center support spacing.
d = 0.4215(S) for two span.
W = Panel width, minimum = 595 mm (23.5 in.).
⊕ = Location of deflection measurement

Figure 4. Uniform Load Test Specimen

Diagram shows strength axis parallel to supports.

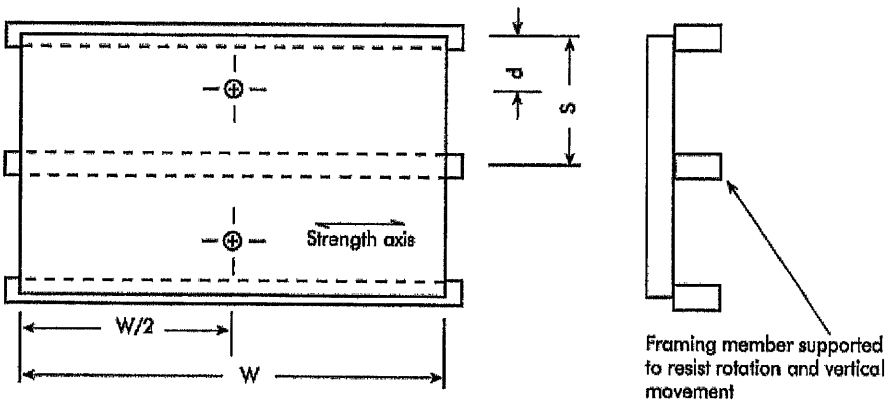

S = Center-to-center support spacing.
d = 0.4215(S) for two span.
W = Panel width, minimum = 595 mm (23.5 in.).
⊕ = Location of deflection measurement

The panel shall be loaded at a uniform rate of 2.4 kPa (50 lbf/ft^2) per minute, recording deflections at 1.2 kPa (25 lbf/ft^2) increments until maximum load is achieved or until the desired proof load is achieved as required. Deflection data shall be required only in sufficient numbers to develop the straight-line portion of the load-deflection curve. In no case shall the number of data points be less than six. Deflection at a given load shall be determined by translating the slope to pass through the origin, thereby correcting for any settling of the system.

7.3 Wall racking load test

7.3.1 General

The principles of Section 14 of ASTM E-72 for wall racking shall be followed.

7.3.2 Specimen preparation

Test specimens 2.4 x 2.4 m (8 x 8 ft) shall be prepared as in ASTM E-72, except that the 89 x 89 mm (nominal 4 x 4 in.) timber attached to the upper plate shall be reinforced with a 100 x 150 mm (4 x 6 in.) steel tube to prevent excessive deformation. An additional vertical deflection gage shall be positioned in the lower right corner of the wall (Figure 7 of ASTM E-72) to record crushing of the lower plate.

Stud framing shall be Douglas-fir or southern pine stud grade, with a moisture content of 15% or less. Nail size and spacing shall be as specified in Table 5. When 3.8 x 76 mm (0.148 x 3.0 in.) nails are used, 64 mm (nominal 3 in.) wide framing shall be used for the center stud (at panel joint) to prevent splitting of framing member.

Specimens shall be tested in the dry condition (see Table 5, footnote b).

7.3.3 Test procedure

Load shall be applied continuously at a uniform rate of load. The rate of loading shall be chosen such that the 1-times test load shall be reached in not less than 2 minutes. The loading rate for the subsequent loading cycles shall be the same as the 1-times test load cycle.

Deflection measurements shall be recorded as the wall is being loaded. At least 10 sets of uniformly-spaced deflection readings shall be taken prior to failure to establish the load-deformation curve. At 1-times and 2-times the test load specified in Table 5, the load shall be removed and the wall shall be allowed to recover for 5 minutes. At 2.5 times the test load, the deflection gages may be removed and the wall shall be loaded to failure.

Deflection shall be reported after removing panel uplift, base slip and crushing components from the total deflection measurement. Ultimate load shall be recorded.

7.4 Fastener-holding resistance test

7.4.1 General

Tests shall measure the single-shear resistance of a nail to lateral movement of the panel. The procedure shall generate data which are to be compared to data from other panel products, but the procedure shall not be used to produce joint design information.

Direct withdrawal loads shall also be measured.

Conditioning – Prior to testing, specimens shall be conditioned as specified in Table 6.

7.4.2 Specimen preparation

Lateral loads – Each specimen shall measure 150 x 150 mm (6 x 6 in.). To serve as test points, four points shall be marked on the centerline of each specimen axis, 25 mm (1 in.) in from each edge. Nail size shall be as required in Table 6.

Nails shall be driven perpendicular to the face of the panel following conditioning. Nail penetration shall be such that the nail head lies flush with the panel face. A backing shall be used to prevent the nail from tearing away the back during driving. All nails shall be driven immediately prior to testing.

Direct withdrawal loads – Test specimens shall be of convenient size (at least 75 x 150 mm [3 x 6 in.]) trimmed from the lateral resistance specimens. Nail size shall be as required. Following conditioning, nails shall be driven through the panel perpendicular to the face and at least 12 mm (1/2 in.) of the shank portion shall project above the surface of the material.

Figure 5. Exploded View of Test Apparatus for Measuring the Lateral Nail-Holding Capacity of Structural Panel Products

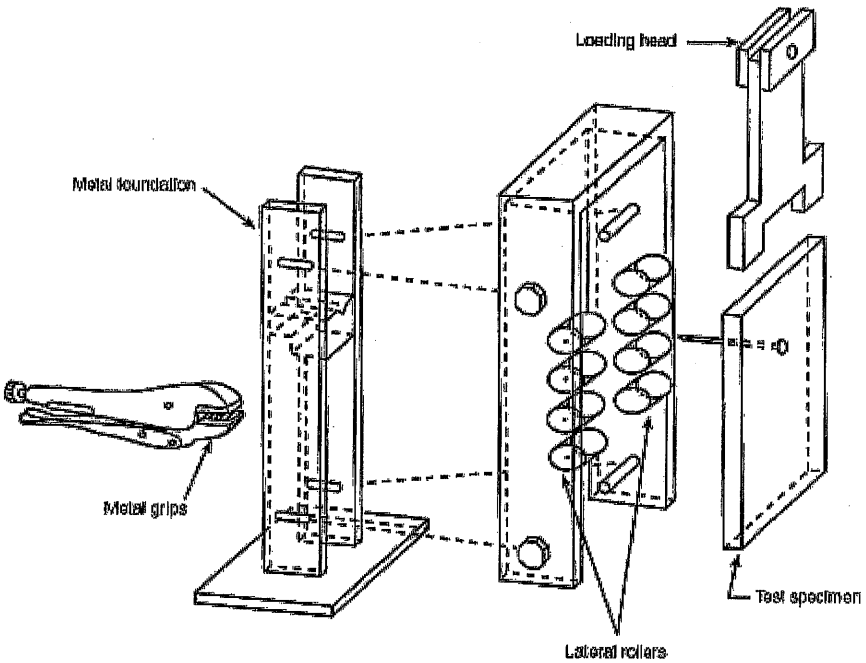

7.4.3 Test procedure

Lateral loads – The fastener shall be loaded in single shear. Apparatus similar to that shown in Figure 5 shall be employed. The nail shank shall be rigidly clamped. Rollers shall be present to insure vertical movement by providing lateral restraint to the panel. Load shall be applied through a yoke-type loading head. One such loading head is illustrated in Figure 5.

The test specimen shall be loaded continuously throughout the test by uniform motion of the movable crosshead of the test machine at a rate of 5 mm (0.2 in.) per minute.

Direct withdrawal loads – Nail holding tests shall be made on nails driven through the thickness of the panel to measure the resistance to withdrawal in a plane perpendicular to the face.

Method of loading shall be in accordance with ASTM D-1761, Section 10.2.

The specimen shall be loaded continuously throughout the test by uniform motion of the movable head of the testing machine at a rate of 5 mm (0.2 in.) per minute.

7.5 Large panel bending test

7.5.1 General

This test procedure determines large panel bending strength and stiffness. The general provisions of ASTM D-3043 Method C shall be followed.

7.5.2 Specimen preparation

Specimens shall be prepared according to ASTM D-3043 Method C, except specimen sizes not less than 310 x 1,220 mm (12 x 48 in.) shall be permitted.

7.5.3 Test procedure

The procedures of ASTM D-3043 Method C shall be followed except specimens shall be tested for stiffness both along and across the panel strength axis, and maximum bending moment shall be determined as required.

7.6 Small static bending test for OSB

7.6.1 General

This test is intended to develop bending strength and stiffness information to be used for quality assurance purposes. The test method follows the principles of ASTM D-3043, Method D. The information developed shall not be considered as appropriate for the purposes of developing design data.

7.6.2 Specimen preparation

Specimens are cut from each sample according to ASTM D-3043 Section 8.2, except that specimen width shall be 115 mm (4.5 in.).

7.6.3 Test procedure

The principles of ASTM D-3043 Sections 8.1 – 8.6 are followed, except that specimens shall be cut to the following length:

355 mm (14 in.) for panels with Performance Category of 1/2 and less,

510 mm (20 in.) for panels with Performance Category greater than 1/2 up to 3/4,

610 mm (24 in.) times Performance Category plus 50 mm (2 in.) for panels with Performance Category greater than 3/4.

7.7 Small static (25 mm x 125 mm [1 in. x 5 in.]) bending test for composites and mat-formed panels

7.7.1 General

This test is intended to develop strength information which acts as a measure of bond integrity. The test shall be run on control and moisture-cycled specimens.

7.7.2 Specimen preparation

Fifteen 25 x 125 mm (1 in. x 5 in.) test specimens shall be cut from each sample to be tested (15 from each direction in the case of panels which exhibit directional properties). Side-by-side matching shall be observed for comparison of control, single cycle and six-cycle exposures. Specimens prepared from panels containing veneer shall be cut with the grain of the veneer parallel to the 125 mm (5 in.) dimension. Specimens prepared from mat-formed panels shall be cut so that the 125 mm (5 in.) dimension of the specimens shall be parallel to the panel strength axis except for panels exhibiting directional properties, in which case five specimens shall be cut along both axes. Specimens shall then be tested following appropriate conditioning.

7.7.3 Test procedure

Each specimen shall be tested as a beam across a 100 mm (4 in.) clear span with the loading head and supports measuring 19.1 mm (3/4 in.) in diameter. The load shall be applied at mid-span at a rate not to exceed 25 mm (1 in.) per minute until failure occurs. Specimens from veneered composite panels shall be oriented so that the thickness of the specimen acts as the depth of the beam. Specimens from mat-formed panels shall be oriented so that the 25 mm (1 in.) cut dimension acts as the depth of the beam and the panel thickness acts as the beam width. The breaking load for each specimen shall be measured to ±4.4 N (±1 lbf). The average breaking load for each panel shall be calculated. In the case of panels that exhibit directional properties, separate averages shall be determined for each specimen direction. Average values shall be reported.

7.8 Linear expansion test measured from oven-dry or 50% relative humidity to vacuum-pressure soak

7.8.1 General

This test method provides evaluation of a panel's dimensional stability.

7.8.2 Specimen preparation

Test specimens shall be cut at least 75 mm (3 in.) wide by at least 300 mm (12 in.) long and prepared for both panel directions.

Specimens shall be selected to avoid large characteristics such as knotholes, knots, or splits in the outer veneers (when veneers are present), especially near the eyelet locations. Otherwise, normal grade features shall be included as they occur.

Fixed reference points which serve as measuring points on the centerline of each specimen shall be located 25 mm (1 in.) in from each end. Brass eyelets placed in pre-bored holes have been found to be suitable reference points. Use of the reference measuring points shall permit determination of linear expansion independent of any additional swelling that might take place at the exposed panel edge.

7.8.2.1 Test procedure

Specimen pre-conditioning:

Procedure A

Specimens shall be oven-dried at 103±2°C (217±4°F) for 24 hours or until constant weight is attained. Constant weight shall be assumed when consecutive readings taken at least 2 hours apart agree within 0.2%.

Procedure B

Specimens shall be conditioned at 50% ±5% relative humidity and 21°±6°C (70°±10°F) until constant weight is attained. Constant weight shall be assumed when consecutive readings taken at least 24 hours apart agree within 0.2%.

Measurement and vacuum-pressure soak cycle:

After pre-conditioning using either Procedure A or B, the specimen shall then be placed in a flattening jig to remove any out-of-plane distortions, and the distance between gage points shall be measured to the nearest 0.025 mm (0.001 in.) with a bar-type trammel equipped with a dial gage.

Following the pre-conditioned measurements, specimens shall be placed in a pressure cylinder, flooded with 18±6°C (65±10°F) tap water and subjected to a vacuum of 91±7 kPa (27±2 in. of mercury) for 1 hour (time shall not begin until full vacuum is achieved). Specimens shall then be subjected to 2 hours of pressure not to exceed 690 kPa (100 psi). After wet exposure, specimens shall be removed from the cylinder and remeasured for length.

Expansion values shall be calculated as a percentage of the pre-conditioned (oven-dry or relative humidity) dimension, as given in the following equations:

Calculation:

Procedure A (oven-dry)

$$\text{Percent Change} = \frac{L_w - L_d}{L_d} \times 100$$

where: L_w = dimension saturated
L_d = dimension oven-dry

Procedure B (relative humidity)

$$\text{Percent Change} = \frac{L_w - L_{50\%}}{L_{50\%}} \times 100$$

where: L_w = dimension saturated
$L_{50\%}$ = dimension equilibrated at 50% RH

7.9 Linear expansion and thickness swell test measured after wetting one side

7.9.1 General

This performance test is designed to measure linear expansion and edge thickness swell.

7.9.2 Specimen preparation

Each 1,220 x 1,220 mm (48x 48 in.) specimen shall have only one cut edge; the remaining three being as prepared by the manufacturer. To serve as measuring points for linear expansion, brass eyelets shall be placed in four pre-bored holes on the centerline of each specimen axis, 25 mm (1 in.) in from each edge. This shall result in a nominal 1,170 mm (46 in.) gage distance both along and across the panel strength axis.

Additionally, points shall be marked on each uncut side of the specimen for thickness swell evaluation. Thickness shall be measured according to Section 7.12.

Moisture content (oven-dry basis) shall be measured according to Section 7.11 prior to testing in a panel from the same lot. When the moisture content of the specimens exceeds 12%, the specimens shall be conditioned to constant weight at 20±3°C (68±6°F) and 65±5% relative humidity to achieve equilibrium moisture content. Constant weight shall be assumed when consecutive readings taken at least 24 hours apart agree within 0.2%.

7.9.3 Test procedure

Linear expansion specimens shall be placed in a flattening jig to remove any out-of-plane distortions, and the distance between gage points shall be measured to the nearest 0.025 mm (0.001 in.) with a bar-type trammel equipped with a dial gage. Thickness shall be measured along the edge to the nearest 0.025 mm (0.001 in.) with a micrometer, applying ratchet pressure during measuring.

Following these as-received measurements, unrestrained specimens shall be mounted within 30 degrees of vertical and shall be wetted on one side with water at 18±6°C (65±10°F). The period of continuous wetting shall be 14 days. No liquid water shall impinge on the back. The back shall be exposed to any water vapor present. All factory edges shall be exposed to water except the freshly-cut edge. The cut edge shall be the top edge, and protection with an edge sealer shall be permitted. After wet exposure, the specimens shall be remeasured.

Expansion values shall be calculated to express results as a percentage of the original dimension, as given in the equation:

$$\text{Percent Change} = \frac{L_w - L_{ar}}{L_{ar}} \times 100$$

where: L_w = dimension saturated
L_{ar} = dimension as received (less than 12% MC)

7.10 Linear and thickness expansion test measured by exposure to relative humidity

7.10.1 General

This method measures linear expansion in accordance with ASTM D-1037, Sections 108 to 111, *Linear Variation with Change in Moisture Content.*

Thickness expansion, where applicable, shall be measured as described in Sections 7.10.2 and 7.10.3.

7.10.2 Specimen preparation

From each sample, two specimens shall be cut according to the procedures of ASTM D-1037, Sections 108 to 111. Test specimens shall be cut 75 mm wide by 1,040 mm long (3 x 41 in.). Shorter lengths shall be permitted, but specimens shall not be less than 300 mm (12 in.) long. To serve as measuring points for linear expansion, brass eyelets shall be placed in pre-bored holes on the centerline of each specimen, 25 mm (1 in.) in from each end. This shall result in a nominal 990 mm (39 in.) gage distance.

Additionally, points shall be selected and marked on the centerline of the specimen 75 mm (3 in.) in from each end to serve as measuring points for thickness expansion.

7.10.3 Test procedure

The procedures of ASTM D-1037, Sections 108 to 111, shall be followed for linear expansion testing, except that specimens shall be placed in a flattening jig to remove any out-of-plane distortions, and the distance between gage points shall be measured to the nearest 0.025 mm (0.001 in.) with a bar-type trammel equipped with a dial gage. Thickness shall be measured to the nearest 0.025 mm (0.001 in.) with a micrometer, applying ratchet pressure during measuring.

Expansion values shall be calculated to express results as a percentage of the 50% conditioned dimension, as given in the equation:

$$\text{Percent Change} = \frac{L_{90} - L_{50}}{L_{50}} \times 100$$

where: L_{90} = dimension equilibrated at 90% RH
L_{50} = dimension equilibrated at 50% RH

7.11 Panel moisture content determination

7.11.1 General

This procedure defines the method of determining panel moisture content by the oven-dry method according to the principles of ASTM D-4442, method B.

7.11.2 Specimen preparation

From each panel, a specimen shall be cut at least 50 mm (2 in.) from any edge. If the specimen size is less than 150 x 150 mm (6 x 6 in.), the entire specimen shall be used.

7.11.3 Test procedure

The specimen weight shall be obtained (±0.2%) and the specimen placed in a drying oven at 103±2°C (217±4°F) until constant weight is achieved. Constant weight shall be assumed when consecutive readings taken at least two hours apart agree within 0.2%.

The moisture content shall be calculated as:

$$M = \left[\frac{W_w - W_d}{W_d}\right] 100$$

where:

M = Moisture content (percent)
W_w = Initial weight (grams or similar units)
W_d = Oven-dry weight (grams or similar units)

7.12 Panel thickness determination

7.12.1 General

This method defines the procedure for determining panel thickness.

7.12.2 Specimen preparation

Panel condition at the time of measurement shall be noted.

7.12.3 Measurement method

Panel thickness shall be measured with a micrometer having 19.1 mm (3/4 in.) (minus 0, plus 1.3 mm [0.050 in.]) diameter anvils. Measurements shall be taken at an applied anvil pressure of not less than 34 kPa (5 psi) or more than 69 kPa (10 psi). The location of the measurements shall be representative of general panel thickness at approximate mid-length along each edge of the panel and the average of the four measurements shall be taken as the thickness of that panel. If a measurement point contains a permissible grade characteristic that affects panel thickness, then the measurement point shall be shifted from that point.

7.13 Probe test for delamination

7.13.1 General

This test procedure defines a method for the determination of delamination in composite panels.

7.13.2 Equipment

The probe used shall measure 6.4 mm (1/4 in.) wide at the tip by 0.3 mm (0.012 in.) thick and shall increase in thickness to about 0.64 mm (0.025 in.), 12 mm (1/2 in.) from the tip. The 6.4 mm (1/4 in.) width shall increase to a width of 16 mm (5/8 in.) at 25 mm (1 in.) from the end. The probe shall be of any convenient length. The tip of the probe shall be squared off and not sharp so that when probing delaminations, fibers across the delaminated area will not be cut.

7.13.3 Specimen preparation

Five specimens shall be cut from each sample to 25 x 125 mm (1 x 5 in.) dimensions, avoiding knots, knotholes and other voids permitted in the grade, with grain of the outer plies in the long direction. Measurement of delamination shall take place prior to any mechanical test.

7.13.4 Test procedure

Delamination shall be evaluated according to the following procedure. The specimen shall be examined visually for delamination. Any separations in the specimen periphery in veneer-to-veneer or veneer-to-wood-based material glueline shall be probed to determine depth of delamination. A separation that is 6.4 mm (1/4 in.) deep for a continuous length of 25 mm (1 in.) shall be considered as having failed the test for delamination. Use of slight pressure is necessary when inserting the probe into the delaminated areas. The pressure shall be limited to that which is applied by gripping the probe between the thumb and first finger. In no case shall any prying action be used.

The number of specimens failing this test shall be reported.

7.14 Adhesive mold test

7.14.1 Equipment

Cabinets shall be used to house test specimens under mold-producing conditions. Each cabinet shall be divided into three interconnecting compartments with adjustable specimen trays, each with a sealed door in the front. On each side of the trays, toweling shall be suspended vertically with the lower ends in a water pan acting as wicking in order to provide maximum wet surface area. These pans shall rest on the floor of the mold cabinet under each compartment. The water level in these pans shall be kept 65 to 75 mm (2-1/2 to 3 in.) in depth.

In order to maintain a uniform temperature within the mold cabinets, a walk-in housing shall surround the cabinets. The temperature within this housing shall be maintained at 27°C (80°F) with a 500-watt heater controlled by a thermostat. Fan-forced air circulation sufficient to avoid stratification shall be used to ensure even temperature in all areas of the housing. No air circulation shall occur within the mold cabinets, since mold growth is dependent upon still air.

A uniform temperature shall be maintained in the housing around the cabinets.

7.14.2 Specimen preparation

Test specimens to be used for determination of mold resistance of the adhesive agent in the panel shall depend on the construction of the panels being tested. Plywood shall be tested by preparing plywood shear specimens as described in PS 1, kerfed to pull lathe checks closed for maximum breaking load.

Test specimens for testing composite panels and mat-formed panels shall be 25 x 125 mm (1 x 5 in.) in dimension. Composite panel specimens shall be cut with the veneer grain in the 125 mm (5 in.) dimension. Mat-formed panels shall be cut with the 125 mm (5 in.) dimension parallel to the panel strength axis, except in the case of panels containing oriented furnish, in which case two complete sets of specimens as described below shall be prepared, one set parallel and one set perpendicular to the panel strength axis.

The four panels to be mold tested shall be cut into 100 pairs of specimens (two sets of 100 pairs each in the case of oriented furnish). These paired specimens (mold test specimen and adjacent control specimen) shall be completely randomized and assembled into 10 groups of 20 specimens each for each direction tested (10 test specimens and 10 controls). The controls and test specimens for each group shall then be separated.

7.14.3 Test procedure

Prior to placing plywood specimens in the mold cabinet, they and their controls shall be stickered, given a five-second dip in tap water at room temperature, and then conditioned for one week at 95% (±2%) relative humidity and a temperature of 27°C (80°F) in a separate conditioning chamber. After one week, test and control specimens shall be removed. Test specimens shall be dusted with soybean flour and placed flat on green pine sapwood veneer strips that have been stored in the mold cabinet. A stack of these veneer strips and test specimens shall then be placed in the mold cabinet. The control specimens shall be allowed to dry at room conditions.

At two-week intervals, the designated mold groupings shall be removed from the cabinet and allowed to dry at room conditions for one week. Test specimens and corresponding control specimens shall then be tested as required. Ten of these groups shall be sufficient to test mold-resistant properties of plywood products.

Mold test specimens for composites and mat-formed products shall be subjected to the five-second dip in tap water and the one-week exposure at 95% (±2%) relative humidity and a temperature of 27°C (80°F) in a separate humidity chamber.

Control test specimens from composites and mat-formed products shall be subjected to testing according to Section 7.16. At two-week intervals, composites and mat-formed products from the mold test and moisture-cycled control specimens shall be dried at room conditions for one week and then tested according to Section 7.7.

7.15 Adhesive bacteria test

7.15.1 General

This method determines if an adhesive system possesses sufficient resistance to bacterial attack to retain bond integrity under conditions which promote bacterial growth.

7.15.2 Specimen preparation

Test specimen size shall depend on panel construction. Plywood panels shall use shear specimens described in PS 1, kerfed to pull lathe checks closed for maximum breaking load. Other panels shall use a specimen 25 x 125 mm (1 x 5 in.). Panels containing veneer shall be cut with the 125 mm (5 in.) dimension parallel to the grain. The veneer shall be completely free of knots, knotholes and other voids permitted in the grade.

Specimens from mat-formed panels shall be cut parallel to the panel strength axis, except for panels containing oriented furnish, in which case two complete sets of specimens shall be cut, one parallel and one perpendicular to the panel strength axis.

Sufficient material is needed to provide 80 specimens per set as required. Specimens within each set shall be numbered consecutively 1 through 80 as cut, with odd-numbered specimens destined for bacteria exposure and the adjacent even-numbered specimens destined for control. Ten odd-numbered specimens and their matching 10 even-numbered specimens shall then comprise an exposure group and control for that group. Four such groups shall be made up from the 80 specimens for each direction tested.

7.15.3 Test procedure

Plywood specimens, including the controls, shall be subjected to one-half hour vacuum and one-half hour pressure under tap water following the cycle used in the PS 1 vacuum-pressure test for Exterior plywood. Control specimens shall then be tested as required in the wet condition. The breaking load shall be recorded and control averages shall be determined for each of the exposure groups.

For composites and mat-formed products, all specimens shall be subjected to the vacuum-soak portion of the moisture cycle test of Section 7.16. Control specimens shall be dried according to the drying provisions of Section 7.16 and broken dry according to the procedures of Section 7.7, with the breaking load recorded and control averages determined for each of the exposure groups.

All specimens designated for the bacteria exposure shall be floated flat in a slurry of soybean flour, water and alder sawdust consisting of 7% soybean flour, 83% water and 10% alder sawdust (sawdust at 18% moisture content). To this slurry shall be added 0.3% by weight of a 50% solution of sodium hydroxide. The slurry shall be poured into trays, filling them to a depth of 25 mm (1 in.). (Note: Do not use copper trays.) These trays containing slurry and specimens shall then be placed into a cabinet described and maintained according to Section 7.14.

One exposure group shall be removed from the cabinet every three weeks over the twelve-week period of the test. Plywood specimens shall be tested wet according to the standard plywood shear test method. Specimens of composite and mat-formed products shall be dried according to the drying cycle of Section 7.16 and broken according to Section 7.7.

7.16 Moisture cycle test for bond performance (single cycle test)

7.16.1 General

This moisture cycle test is a quality control method to accelerate bond degradation. Following moisture cycling, a mechanical test is generally performed.

7.16.2 Specimen preparation

Specimen size and configuration shall depend upon the test to follow moisture cycling.

7.16.3 Test procedure

The specimens shall be placed in racks to ensure free movement of water and air around the specimens. The specimens shall then be placed in a vacuum-pressure vessel which is then filled with 66°C (150°F) water. A vacuum of 50.6 kPa (15 in. of mercury) shall be drawn on the vessel for 30 minutes. The vacuum shall then be released and the specimens shall be allowed to soak in the water at atmospheric pressure for 30 minutes. The vessel shall then be drained and the specimens dried for at least 15 hours at 82°C (180°F) in an oven with fan-forced air circulation of 45 to 50 air changes per minute. The specimens shall then be tested dry according to the appropriate test method.

7.17 Moisture cycle test for delamination and strength retention (six-cycle test)

7.17.1 General

This moisture cycle is used in evaluation of delamination and strength retention of products rated as Exposure 1.

7.17.2 Specimen preparation

Specimen size and configuration shall depend on the test to follow moisture cycling.

7.17.3 Test procedure

Specimens shall be placed in racks to ensure free movement of water and air around the specimens. The specimens shall then be placed in a vacuum-pressure vessel which is then filled with 66°C (150°F) water. A vacuum of 50.6 kPa (15 in.) of mercury shall be drawn on the vessel for 30 minutes. The vacuum shall then be released, and the specimens shall be allowed to soak in the water at atmospheric pressure for 30 minutes. They shall afterwards be removed and dried for 6 hours at 82°C (180°F) in an oven with fan-forced air circulation of 45 to 50 air changes per minute. Specimens shall then be returned to the pressure vessel and the vacuum-soak cycle repeated. Following the second vacuum-soak cycle, specimens shall again be placed in the oven and dried for 15 hours. This shall complete two cycles. Testing shall be continued for two additional days until 6 cycles have been completed. The specimens are then tested dry according to the appropriate test method.

7.18 Bond performance test for plywood with knots and knotholes

7.18.1 General

This is a moisture cycle and loading procedure for verifying resistance to deflection and damage under concentrated static and impact loads applied at the location of the maximum knot or knothole. The method is used to evaluate knots and knotholes greater than 51 mm (2 in.) but not exceeding 76 mm (3 in.) in width measured across the grain of Exposure 1 plywood panels.

7.18.2 Specimen preparation

From ten 1,220 x 2,440 mm (48 x 96 in.) panels, a specimen at least 595 mm (23.5 in.) wide by twice the span in length shall be cut. The test specimen shall be configured such that the subject knot or knothole is along a mid-test-span line and at least 295 mm (11-5/8 in.) from either edge. The subject knot shall be the maximum size (+0, –12 mm [+0, –1/2 in.]) permitted within the grade.

Each specimen shall be placed vertically in a tank and sprayed with water on both faces continuously for 72 hours. As an alternative to spraying, soaking panels continuously for 72 hours shall be permitted provided the height of the water level above the panels does not exceed 600 mm (24 in.). Panels shall then be redried until constant weight is reached at 20±3°C (68±6°F) and 65±3% relative humidity.

7.18.3 Test procedure

Concentrated static load – Procedures of ASTM E-661 and Section 7.1 of PS 2 shall be followed except that:

1. The specimen shall be placed in the test frame with the subject knot or knothole in the tension zone when a bending load is applied.
2. The load shall be applied over the subject knot or knothole on the face opposite the knot or knothole.

Concentrated impact load – Procedures of ASTM E-661 and Section 7.1 of PS 2 shall be followed, except that:

1. The specimen shall be placed in the test frame with the subject knot or knothole in tension.
2. The impact shot bag shall be dropped once from a height of 760 mm (30 in.).
3. The shot bag shall be dropped over the subject knot or knothole on the face opposite the knot or knothole.

7.19 Radial probe test

7.19.1 General

This method defines a procedure for determining delamination associated with knots and knotholes in plywood panels.

7.19.2 Equipment

The probe used shall measure 6.4 mm (1/4 in.) wide at the tip by 0.3 mm (0.012 in.) thick and shall increase in thickness to about 0.6 mm (0.025 in.), 12 mm (1/2 in.) from the tip. The 6.4 mm (1/4 in.) width shall increase to a width of 16 mm (5/8 in.) at 25 mm (1 in.) from the tip. The probe is to be of any convenient length. The tip of the probe shall be squared off and not sharp so that when probing delaminations, fibers across the delaminated area will not be cut. In addition, the probe shall be fitted with a mechanism that is capable of limiting the force to the maximum level specified.

7.19.3 Specimen preparation

One knot or knothole per sample panel shall be selected. The knot or knothole selected shall be the maximum size (+0, –13 mm [+0, –1/2 in.]) permitted within the grade. Each specimen shall be cut 300 x 300 mm (12 x 12 in.) with the knot or knothole approximately centered.

Specimens shall be moisture cycled and redried according to one of the following three cycles:

1. The 72-hour water spray cycle specified in Section 7.18. After exposure, specimens shall be redried until constant weight is reached at 20±3°C (68±6°F) and 65±3% relative humidity.
2. The 72-hour water soak cycle specified in Section 7.18 (as an alternative to the 72-hour water spray cycle). After exposure, specimens shall be redried until constant weight (weight change ≤ 0.2% within 2 hours) is reached at 20±3°C (68±6°F) and 65±3% relative humidity.
3. Specimens shall be placed in a pressure cylinder, flooded with water at 49±6°C (120 ±10°F) and subjected to a vacuum of 91±7 kPa (27±2 in. of mercury) for 3 hours. Specimens shall then be subjected to 3 hours of pressure not to exceed 414 kPa (60 psi). This shall be followed by a second vacuum exposure of 91±7 kPa (27±2 in. of mercury) for 2 hours. After exposure, the specimens shall be redried until constant weight (weight change ≤ 0.2% within 2 hours) is reached at 20±3°C (68±6°F) and 65±3% relative humidity.

7.19.4 Test procedure

Each specimen shall be cut into 8 sectors with radii intersecting at center of knot or knothole. The area surrounding the knot or knothole shall be visually inspected for delamination. Where separations are visible, the probe shall be inserted with a force of 35.5±4.5 N (8±1 lbf). No prying action or lateral movement shall be applied.

For each sector, the radial distance from the tip of the sector to the boundary of separation beyond the knot or knothole shall be measured along both edges of the sector and recorded. Where a separation is not found, the distance from the tip of the sector to the boundary of the knot or knothole shall be measured and recorded.

The total area of separation for each specimen shall be calculated as:

$$A = \pi R^2$$

where: A = total area of separation (mm^2 or $in.^2$)

R = average radius of separation, calculated as the average of 16 distances (measured at edges of sectors) from the tips of the sectors to either the boundary of separation or the boundary of the knot or knothole (mm or in.).

7.20 Dead weight stiffness capacity (EI) test (non-mandatory)

7.20.1 General

This procedure provides an estimate of full panel stiffness capacity. Dead weight stiffness is not a requirement.

7.20.2 Equipment

Sawhorses may be used for support, but the metal frame shown in Figure 6 is recommended. The supports shall be at least 1,220 mm (48 in.) wide, fixed to the floor or weighted, level and parallel to each other. The deflection gauge shall have a range of 0 to 50 mm (0 to 2 in.) and be graduated in 0.025 mm (0.001 in.) increments. Loading bars shall be 1,220 mm (48 in.) long and 25 to 38 mm (1 to 1.5 in.) wide. The weight of the bars shall be determined to the nearest 0.5 N (0.1 lb). Load bars are typically in the range of 44.5, 89.0 and 178.0 N (10, 20 and 40 lb).

Figure 6. Steel Test Frame for Dead Weight Stiffness Test

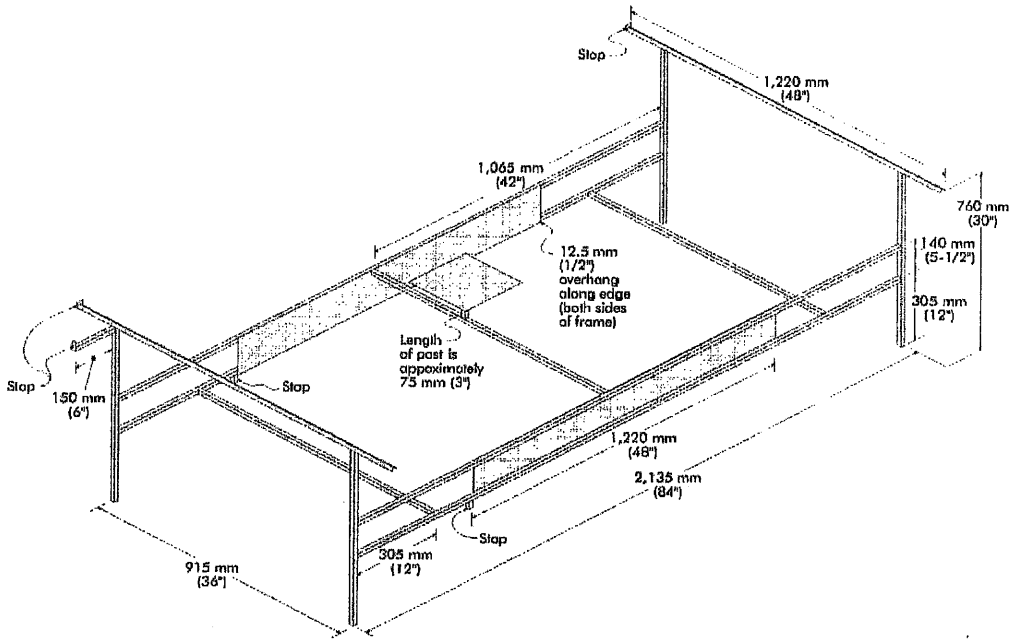

7.20.3 Specimen preparation

The number of samples will be prescribed by the certification agency. When measuring stiffness parallel to the strength axis, 1,220 x 2,440 mm (48 x 96 in.) panels shall be tested. Other lengths are allowable when measuring stiffness perpendicular to the strength axis. It may be useful to mark lines across the panel back at 1,220 mm (4 ft) width at 150 mm (6 in.) from either end and across the panel top at mid-length (Figure 7). On the bottom side, also mark an "X" at the panel's center.

Figure 7. Panel Alignment Marks

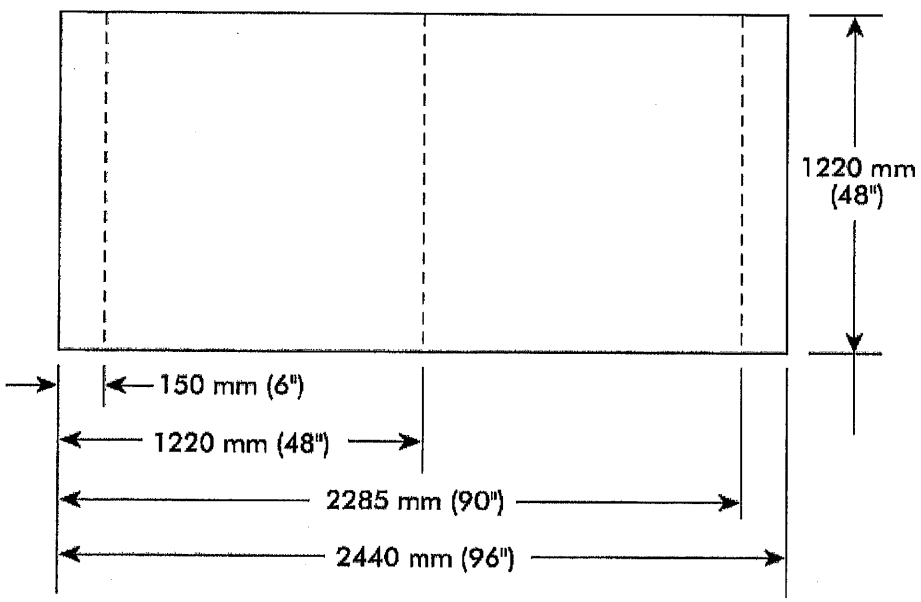

On the reverse side of the panel, mark an "X" at the panel's center:

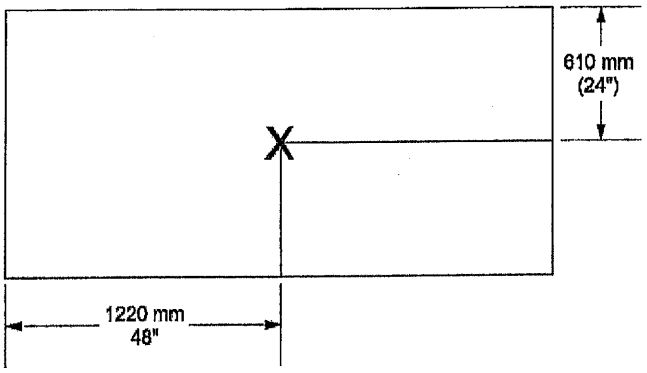

7.20.4 Test procedure

The typical span for testing the 2,400 mm (96 in.) axis shall be 2,135 mm (84 in.) and 915 mm (36 in.) for the 1,220 mm (48 in.) axis. Place the panel on top of the supports and align it so the ends are parallel to the supports, with equal length of panel overhanging each support. The lines drawn on the panel should be useful for alignment. Place the surface up, in accordance with the manufacturer's use recommendations. The deflection gauge should be placed under the panel in an adjustable fixture, perpendicular to the panel and with the tip of the gauge directly under the "x" (see Section 7.20.3).

Place load bars at mid-span, parallel to the supports. Preloads are applied first to settle the panel, removing the possible effects of warp, and should result in complete contact of the panel across the support. Discard excessively warped panels. Preloads of 44.5 N (10 lb) are recommended for panels with Performance Category between 3/8 and 7/16 and 89.0 N (20 lb) for panels with Performance Category greater than 15/32.

Record the deflections to the nearest 0.025 mm (0.001 in.). In order to obtain accurate stiffness capacity, the difference between the preload and the final load deflections should be in the range of 6.4 to 8.9 mm (0.25 to 0.35 in.) for panels with Performance Category of 3/4 or less. Panels with a Performance Category of greater than 3/4 should have sufficient weight to result in 5 mm (0.2 in.) deflection and may be cut to 610 mm (24 in.) width to accommodate deflection requirements.

Table 9. Typical pre-loads and test loads

Performance Category	Pre-load		Test Load		Test Span: Along Strength Axis		Test Span: Across Strength Axis	
	N	lb	N	lb	mm	in.	mm	in.
3/8, 7/16	44.5	10	44.5	10	2,135	84	915	36
15/32 – 5/8	89.0	20	89.0	20	2,135	84	915	36
23/32 – 7/8	89.0	20	178.0	40	2,135	84	915	36
Greater than 7/8	89.0	20	*	*	2,135	84	915	36

*If larger weights are not available and deflection is less than recommended, it may be appropriate to reduce the panel width (e.g., from 1,220 mm [48 in.] to 610 mm [24 in.])

Two people should always be involved because of the need for immediate deflection readings after applying the preload and final load. The gauge shall be read immediately after application of the preload bar. Apply additional load(s) after reading the preload deflection. Record the second deflection reading immediately after applying the final load bar.

The general equation for calculating dead weight stiffness is:

$$EI = \frac{(P_2 - P_1) \times \lambda^3}{K \times b \times (D_2 - D_1)}$$

where: EI = Panel stiffness, N-mm^2/mm (lbf-in.^{2}/ft)
P_1 = Pre-load, N (lbf)
P_2 = Total load, N (lbf)
λ = Span, mm (in.)
b = Width, mm (in.)
D_1 = Deflection after preload, mm (in.)
D_2 = Deflection after final load, mm (in.)
K = Constant (48 when b is measured in mm, 4 when b is measured in inches)

8 TRADEMARKING AND CERTIFICATION

8.1 Certification

Panels represented as conforming to this Standard shall bear the stamp of a qualified inspection and testing agency which (1) inspects the manufacture (with adequate sampling, testing and examination for quality) or (2) has tested a randomized sampling of the finished panels in the shipment being certified for conformance with this Standard.

8.2 Qualified inspection and testing agency

A qualified inspection and testing agency is defined as one that:

(a) has the facilities and trained technical personnel to verify that the grading, measuring, species, construction, sanding, bonding, workmanship, and other characteristics of the products as determined by inspection, sampling and testing conform to all of the applicable requirements specified herein;

(b) has developed procedures to be followed by agency personnel in performance of inspection and testing;

(c) has no financial interest in, or is not financially dependent upon, any single company manufacturing the product being inspected or tested; and

(d) is not owned, operated or controlled by any such company.

8.3 Panel marking

All Sheathing, Structural I Sheathing and Single Floor panels represented as conforming to this Standard shall be identified with a mark bearing the grade name appropriate under these specifications, and a mark of a qualified inspection and testing agency. If identified by such a mark, the product specification shall be available from the qualified inspection and testing agency whose mark appears on the panel. The panel grade, span rating, bond classification and the symbol PS 2-10 signifying conformance to this Standard shall be included in the trademark. Any supplemental application specifications of the manufacturer shall be clearly marked on each panel. Mat-formed panels with oriented furnish shall be marked to show the direction of the strength axis. The panel fractional Performance Category (see Section 5.2.1.2) and term "Performance Category" or abbreviation (i.e., PERF CAT, CAT or Category) shall be labeled on the panel. In addition, the thickness in 1000ths of an inch within the permitted tolerance (see Section 5.2.1.2) for the Performance Category shall be labeled on the panel.

ADVISORY NOTE: See Appendix D for a table of recommended thickness labels.

8.3.1 Voiding marks

Panels originally marked as conforming to this Standard but subsequently rejected as not conforming thereto shall have any reference to the Standard obliterated or voided by the manufacturer as follows:

Shop panels shall be plainly identified by means of a 100 x 125 mm (4 x 5 in.) minimum size mark carrying the legend, "Shop-cutting panel – all other [agency] marks void." (See definition of shop-cutting panel.)

No reference shall be made to this Standard in the certification or trademarking of panels not conforming to all of the applicable provisions of this Standard.

9 EFFECTIVE DATE AND IDENTIFICATION

The PS 2 Standing Committee revised, approved and submitted this standard for public review on September 1, 2010. Upon completion of the public review, the standard became effective on June 1, 2011. As of that date, reference to this Standard is permitted in contracts, codes, advertising, invoices, product labels, and the like; however, a product shall not be advertised nor represented in any manner that in any way might imply approval or endorsement of that product by the National Institute of Standards and Technology and/or the U.S. Department of Commerce.

The following suggested statements are permitted in representing products as conforming to the requirements of this Standard:

- "This [*e.g, panel, shipment]* conforms to all requirements established in Voluntary Product Standard PS 2-10, 'Performance Standard for Wood-Based Structural-Use Panels,' in accordance with the U.S. Department of Commerce Procedures for the Development of Voluntary Product Standards. Full responsibility for the conformance of this product to the Standard is assumed by (name and address of producer and/or distributor)."
- "Conforms to Voluntary Product Standard PS 2-10, (name and address of producer and/or distributor)."

10 STANDING COMMITTEE

A Standing Committee has been appointed to assist in keeping this Standard current. The names of the members of the Committee are available from the Secretariat for this Committee: the Standards Services Division, National Institute of Standards and Technology, 100 Bureau Drive, MS 2150, Gaithersburg, Maryland 20899-2150, website: ts.nist.gov/sccg.

Issues regarding interpretation or implementation of the Standard and third-party quality assurance policies and procedures shall be considered by a Standard Implementation Review Subcommittee as appointed by the Standing Committee. A request to consider such issues shall be made in writing to the Secretariat of the Standing Committee (NIST), who will bring it to the attention of the Standing Committee. Formal operating procedures developed for the Subcommittee shall be subject to approval by NIST. Any recommended actions by the Subcommittee will be reported to the Standing Committee for their consideration and action.

APPENDIX A. (Nonmandatory)

A1 SHIPMENT REINSPECTION PRACTICES

A1.1 General

This information is based on industry practice and is offered to structural-use panel purchasers.

A1.2 Request for reinspection

Any request by the buyer for the reinspection of any item or lot of panels certified as conforming to this Standard shall be directed to the seller. Lacking agreement of the buyer and seller as to the settlement of a complaint, the purchase, sale or shipment of panels certified as conforming to this Standard shall be construed as involving agreement to submit such panels to reinspection by the qualified inspection and testing agency whose trademark was used.

A1.3 Responsibility of the buyer

A request to the seller for reinspection is permitted:

a. for panel grade – within 30 days[6] after arrival at the first point of receipt from the mill, if the grade of any item, as invoiced, is in doubt;

b. for glue bond quality of Exterior panels – when delamination is visibly evident;

c. for bond quality and bond performance associated with knots and knotholes of Exposure 1 panels – within 6 months after arrival at first point of receipt from the mill, if delamination is visibly evident;

d. for structural performance, such as resistance to concentrated loads on panels – within 6 months after arrival at first point of receipt from the mill;

e. for physical properties, such as linear expansion of panels – within 6 months after arrival at first point of receipt from the mill.

All panels of disputed grade shall be kept intact and properly protected from damage, deterioration and from direct exposure to moisture which could interfere with a fair reinspection.

All panels of disputed quality shall be held for a period not to exceed 30 days after the date of request for reinspection. Use by the buyer of any or all of the disputed stock within the 30-day period shall constitute an acceptance of the used portion.

A1.4 Responsibility of the seller

A request for reinspection shall be promptly acknowledged by the seller following its receipt.

A1.5 Cost and assistance

The expense of reinspection shall be borne by the seller if the item, lot or shipment in dispute fails to pass the reinspection as provided for in A1.6. If the panels pass the reinspection, said expenses shall be borne by the buyer. The buyer shall lend all reasonable assistance to facilitate the reinspection.

A1.6 Reinspection procedures and settlement

A1.6.1 Condition of panels

All panels designated as complying with this Standard shall be subject to reinspection in the as-manufactured condition only. This requirement does not apply to reinspections for bond quality.

A1.6.2 Sampling for panel grade, size and thickness reinspections

At buyer's or seller's option, grade, size and thickness reinspections may include all panels of an item whose conformance to this Standard is in dispute. However, buyer and seller may agree upon a reduced basis for sampling provided at least 20% or 300 panels, whichever is smaller and which represents only those items as invoiced which are in dispute, are reinspected for conformance. For reduced sampling, the quantity of panels selected from each disputed

---

[6] For unitized shipments, the 30-day limit shall be extended to include the period dating from receipt of shipment to breaking of the first bundle, but not exceeding 6 months, provided the requirement for keeping the disputed panels intact is observed and the panels in question are held for at least 30 days following the request for reinspection.

item shall be prorated according to the number of panels included in each item as invoiced. Panels found to be below grade or out of tolerance for size and thickness shall have improper trademarks obliterated and shall be re-marked with appropriate designation with a special inspection mark registered by the qualified agency conducting the reinspection and applied by that agency's authorized representative.

A1.6.3 Panel grade, size and thickness reinspections

If reinspection establishes that a disputed item is more than 5% below grade or out of dimensional tolerance for the product description as invoiced, that item fails to pass the reinspection and the nonconforming panels need not be accepted. If reinspection establishes that a disputed item is 5% or less below grade or out of dimensional tolerance, it passes the reinspection and the disposition of the nonconforming panels shall be as agreed upon between the buyer and seller. In addition to the above 5% grade and dimensional tolerance, a 5% tolerance shall apply separately to the inner ply gap limitations, including the limitations applicable to plugged crossbands and jointed crossbands, as set forth in PS 1.

A1.6.4 Sampling for bond quality, bond performance associated with knots and knotholes, structural performance or physical properties reinspections

For test purposes, 20 panels, or 5% of the panels, whichever is less, shall be selected at random from the item, lot or shipment which is in dispute. The number of panels required shall be calculated by applying the "percent panels" to the lot size and converting part panels to whole panels by using a rounding procedure where 0.01 to 0.49 parts are considered to be the smaller whole number, while 0.50 to 0.99 parts are considered to be the larger whole number. These panels shall be selected from locations distributed as widely as practicable throughout the material being sampled. When an item, lot or shipment involves panels with different bond requirements, testing and evaluation shall apply separately to each category.

A1.6.5 Bond quality reinspections

Reinspection of the unused panels in the disputed item, lot or shipment shall be carried out following the procedures set forth in Sections 7 and A1.6.4 above. If the reinspection tests establish that the glue bond quality does not meet the requirements of Section 6.2.4 as applicable, the item, lot or shipment fails to pass the reinspection and may be rejected by the buyer. If the glue bond quality requirements are met, the item, lot or shipment passes the reinspection, and the buyer shall accept the item, lot or shipment as invoiced, except that the buyer need not accept any delaminated Exterior panels.

A1.6.6 Reinspection for bond performance associated with knots and knotholes

Unless otherwise agreed upon between buyer and seller, reinspections for bond performance associated with knots and knotholes shall be limited to knots and knotholes greater than 50 mm (2 in.) but not exceeding 76 mm (3 in.) in width measured across the grain. Knots and knotholes within this range shall be reinspected according to Sections 7.18 and 7.19. If the panels were not exposed to weather prior to reinspection sampling, they shall be moisture conditioned according to the cycle specified in Sections 7.18 and 7.19 prior to reinspection.

If reinspection tests establish that the bond performance associated with knots and knotholes requirements are not met, the item, lot or shipment fails to pass the reinspection and may be rejected by the buyer. If the reinspection requirements are met, the item, lot or shipment passes the reinspection and the disposition of the nonconforming panels shall be as agreed upon between the buyer and seller.

A1.6.7 Structural performance reinspections

Unless otherwise agreed upon between buyer and seller, structural performance reinspections are limited to concentrated loads (Section 5.3.1.1). If the buyer and seller agree to additional tests, a larger number of panels than those given in Section A1.6.4 may be needed. If the reinspection tests establish that the concentrated load requirements are not met, the item, lot or shipment fails to pass the reinspection and may be rejected by the buyer. If the concentrated load requirements are met, the item, lot or shipment passes the reinspection and the disposition of the nonconforming panels shall be as agreed upon between the buyer and seller.

A1.6.8 Physical property reinspections

Unless otherwise agreed upon between buyer and seller, physical property reinspections shall be limited to linear expansion (Section 5.3.2.1). If the reinspection tests establish that the linear expansion requirements are not met, the item, lot or shipment fails to pass the reinspection and may be rejected by the buyer. If the linear expansion requirements are met, the item, lot or shipment passes the reinspection and the disposition of the nonconforming panels shall be as agreed upon between the buyer and seller.

Reinspection Flow Chart

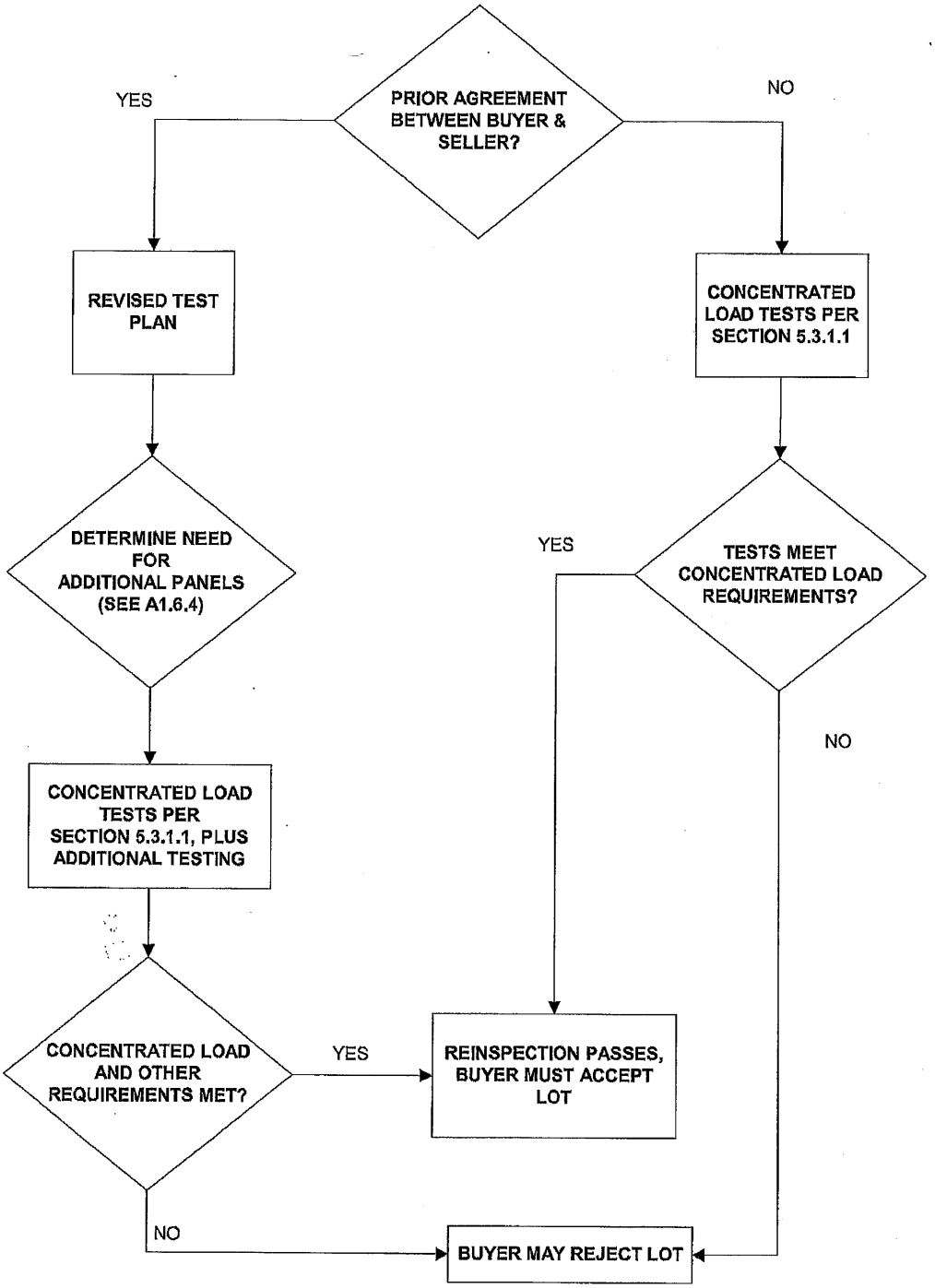

APPENDIX B. (Nonmandatory)

PS 2 Qualification Flow Chart

PERFORMANCE-RATED PANEL QUALIFICATION
FOR
ROOF, SUBFLOOR, SINGLE FLOOR AND WALL APPLICATIONS

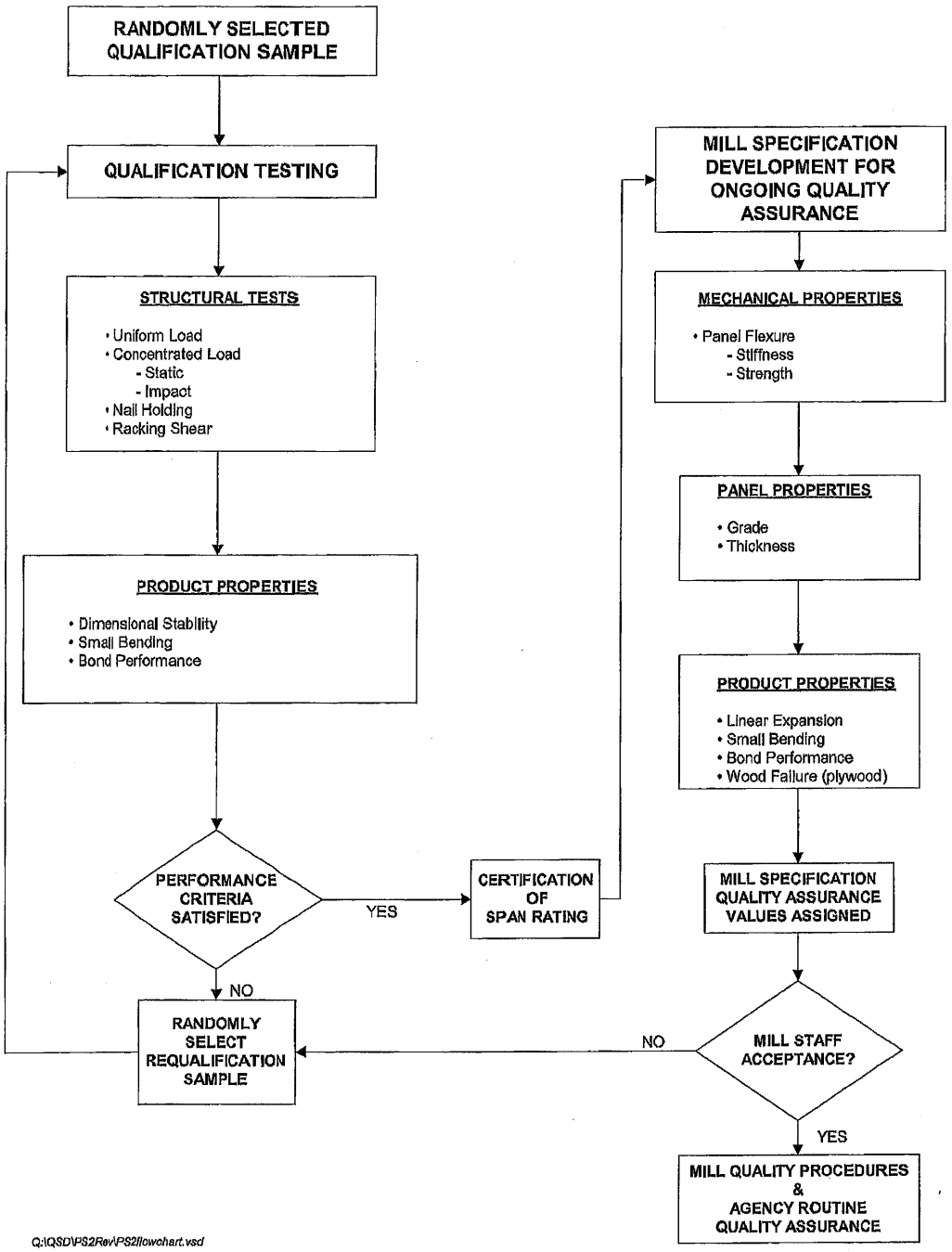

Q:\QSD\PS2Rev\PS2flowchart.vsd

APPENDIX C. (Nonmandatory)

History of the Standard and Comments on the Current Edition

C1 History of PS 2

In September 1988, a special Bi-national Committee (BNC) was formed and charged with the task of fostering the mutual objective of the United States and Canada with respect to the development and implementation of harmonized standards with regard to performance requirements for plywood. This action was a consequence of the implementation of the Free Trade Agreement (FTA) of 1987. In accordance with the Agreement, U.S. tariffs on plywood and other structural panels could not be removed until the trade issues involving plywood standards were resolved. Of concern to the United States was the fact that certain grades of plywood permitted in PS 1 were not covered in Canadian plywood standards; and, consequently, not acceptable under Canadian building codes.

The BNC began its task by reviewing the existing industry standard APA – *The Engineered Wood Association* (APA), APA PRP-108, Performance Standards and Policies for Structural-Use Panels, and the Canadian Standards Association (CSA) standard CAN/CSA-O325, Construction Sheathing, to identify the technical differences and to consider the roles the standards might play in resolving the plywood trade issues. It concluded that the development of common criteria embodied in performance-based national standards offered means to resolve the trade issue.

Next, the BNC sponsored a joint U.S./Canadian study designed to produce additional comparative information on U.S. and Canadian plywood. Based on BNC's assessment of the technical differences in the APA and CSA standards and the data derived from the joint study, the BNC in November 1990 submitted new U.S. and Canadian draft standards, respectively, to the National Institute of Standards and Technology (NIST) in the United States and the CSA in Canada for processing as national consensus standards.

In March 1991, APA signed an agreement with NIST to support development of the proposed U.S. performance standard as a Voluntary Product Standard (VPS) under procedures of the U.S. Department of Commerce. In April 1991, NIST established a Standard Review Committee under the VPS Program to assume responsibility for development of the U.S. standard. On October 15, 1991, after two 30-day review periods and some editorial changes, the Committee recommended unanimously that the proposed standard be prepared for public review and acceptance as a Voluntary Product Standard.

In March 1992, the proposed VPS standard was distributed to a list of manufacturers, distributors, consumers and others who might have interest in the subject standard, and on April 8, 1992, NIST announced in the Federal Register the public circulation of the proposed standard and invited public comments. A 75-day comment period was allowed. Following public review of the standard, which ended June 22, 1992, NIST determined that the responses indicated consensus among producers, distributors and consumers in accordance with the published procedures. The standard was originally approved for publication by NIST as Voluntary Product Standard PS 2-92, Performance Standard for Wood-Based Structural-Use Panels, on August 27, 1992.

The new U.S. standard was not intended to replace existing standards such as Voluntary Product Standard PS 1-83, Construction and Industrial Plywood, but to serve as an alternative performance-based standard that would relate to a variety of forms of structural panels: plywood, oriented strand board, waferboard, structural particleboard, and composite panels.

C2 Edition PS 2-04

After considerable technical review, PS 2-04 was revised and accepted in December 2004. The PS 2-04 edition contained many revisions. The major technical revisions included the following.

C2.1 Revision to Exposure 1 bond performance methods

This edition of the standard introduced a new method for determining Exposure 1 bond performance for mat formed panels. As an alternate to using the 1 inch by 5 inch edge wise bending method, stiffness and strength criteria based on larger flatwise bending specimens were introduced.

C2.2 Linear expansion method

Revisions to the linear expansion method were made based on a need to reflect industry performance and serviceability requirements. Industry samples were benchmarked for linear expansion, and a suitable cycle and criteria were evaluated. The criterion was established at an average level, which is common for serviceability applications. The cycle was based on equilibrium at 50% relative humidity, which is viewed to be more representative of installed conditions than the oven-dry condition. Industry surveys were conducted and reviewed to determine acceptable performance using the revised criteria, and test methods and verification of the methods was conducted on a representative subset of products.

C2.3 Pass/fail provisions for structural performance

General comments on the structural performance sections indicated the instructions were not as clear as they could be and even sometimes in conflict. In addition, concerns were expressed about applying structural performance criteria to daily mill quality assurance evaluations. Finally, there were questions about the linearity of deflection requirements for a given increase in spans. The following changes were made:

a. Revisions to the sections describe the test provisions more clearly. Each possible scenario is described independently. The actual percentage resulting in passing results is specified for each test and criterion explicitly.

b. Where appropriate, a clause was added to each performance test stating that the average of the tests should meet the designated requirement.

C2.4 Exposure 2

This exposure classification was deleted due to the lack of use by the industry.

C2.5 Stability Index

The stability Index was deleted due to the use of linear expansion as the primary method to determine dimensional stability.

C3 Current edition, PS 2-10

After considerable technical review by members of the PS 2 Standing Committee, the standard was revised to address the following technical and informational aspects.

C3.1 Labeling of panel thickness

In response to consumer complaints regarding panel thickness tolerances that created the potential for labeling being out of compliance with NIST Handbook 130 and 133, the standard was revised to create a Performance Category based on customary thickness notations used in U.S. model building codes. In addition, panel labeling requirements were changed to require the Performance Category and decimal thickness representation.

C3.2 Formaldehyde appendix

In response to national and international regulations of formaldehyde emissions from some wood products, an informational appendix was added to review those regulations with respect to PS 2 panels.

C3.3 Environmental attributes and green building rating systems.

An informational appendix was added to review environmental attributes of PS 2 panels with respect to various green building rating systems.

C3.4 Technical revisions.

A review of technical provisions and terminology led to various changes to reflect industry practice. These included revisions to clarify the dry test condition and the "20" span rating. Fastener load values were modified to better reflect panel performance characteristics and to respond to increased code provisions for fastening requirements.

APPENDIX D. (Nonmandatory)

Recommended Thickness Labels

D1 Recommended thickness labels

Section 5.2.1.2 specifies thickness tolerances and Performance Categories for panels. Section 8.3 specifies that the panels shall be labeled with a thickness label in 1000ths of an inch and that labeled quantity shall be within the minimum and maximum thickness specification for that Performance Category. Table D1 presents recommended thickness labels.

D2 Regulations on labeling

See Appendix E for discussion of regulations dealing with labeling.

TABLE D1. RECOMMENDED THICKNESS LABELING FOR PANELS

	Thickness Requirements for Panels[1]		
Performance Category[2]	Minimum Thickness in. (mm)	Maximum Thickness in. (mm)	Recommended Thickness Label[(3)]
1/4 PERF CAT	0.219 (5.56)	0.281 (7.14)	Thickness 0.225 IN.
5/16 PERF CAT	0.281 (7.14)	0.344 (8.73)	Thickness 0.289 IN
11/32 PERF CAT	0.313 (7.94)	0.375 (9.53)	Thickness 0.322 IN.
3/8 PERF CAT	0.344 (8.73)	0.406 (10.32)	Thickness 0.354 IN.
7/16 PERF CAT	0.406 (10.32)	0.469 (11.91)	Thickness 0.418 IN.
15/32 PERF CAT	0.438 (11.11)	0.500 (12.70)	Thickness 0.451 IN.
1/2 PERF CAT	0.469 (11.91)	0.531 (13.49)	Thickness 0.483 IN.
9/16 PERF CAT	0.531 (13.49)	0.594 (15.08)	Thickness 0.547 IN.
19/32 PERF CAT	0.563 (14.29)	0.625 (15.88)	Thickness 0.578 IN.
5/8 PERF CAT	0.594 (15.08)	0.656 (16.67)	Thickness 0.609 IN.
23/32 PERF CAT	0.688 (17.46)	0.750 (19.05)	Thickness 0.703 IN.
3/4 PERF CAT	0.719 (18.26)	0.781 (19.84)	Thickness 0.734 IN.
13/16 PERF CAT	0.781 (19.84)	0.844 (21.43)	Thickness 0.788 IN.
7/8 PERF CAT	0.831 (21.11)	0.919 (23.34)	Thickness 0.849 IN.
1 PERF CAT	0.950 (24.13)	1.050 (26.67)	Thickness 0.970 IN.
1-1/8 PERF CAT	1.069 (27.15)	1.181 (30.00)	Thickness 1.091 IN.
1-1/4 PERF CAT	1.188 (30.16)	1.313 (33.34)	Thickness 1.213 IN.

[1]Thickness requirements are based on a tolerance of +/- 0.8 mm (1/32 in.) for panels with Performance Categories of 13/16 and less and +/- 5% for panels with Performance Categories greater than 13/16 unless a closer tolerance is determined through qualification testing. Inch units are presented as primary units due to customary practice in the United States.

[2] Acceptable abbreviations are PERF CAT, CAT or Category.

[3] The panel manufacturer may label with any thickness value provided the product complies with Section 5.2.1.2. The recommended thickness label for categories less than 9/16 is 3% above the minimum. The recommended thickness label for categories greater than or equal to 9/16 are the minimum values for PS 1 sanded panels.

APPENDIX E. (Nonmandatory)

Labeling Guidelines Based on the Uniform Packaging and Labeling Regulations of NIST Handbook 130 v2009

E1 Summary

E1.1 When intended for sale or distribution, the labeling of the panels should meet the requirements of the Uniform Packaging and Labeling Regulation. This section provides guidance on the requirements applicable to wood panels.

E2 Background

E2.1 The National Institute of Standards and Technology of the U.S. Department of Commerce ("NIST") promotes the development of standards to be applied across industry and supports the publishing of NIST Handbook 130, "Uniform Laws and Regulations in the areas of legal metrology and engine fuel quality." NIST Handbook 130 is a compilation of the latest uniform laws and regulations regarding packaging and labeling requirements adopted by the National Conference on Weights and Measures, Inc. ("NCWM") and is intended to represent standards to be adopted into law by the weights and measures jurisdictions of the United States.

E2.2 Of the weights and measures jurisdictions of the United States (including, the 50 states, Washington DC, Puerto Rico and the Virgin Islands) with respect to the Uniform Packaging and Labeling Regulation, (i) 19 have adopted the most current version of NIST Handbook 130, (ii) 29 have adopted a prior version of NIST Handbook 130, (iii) four have laws and regulations in place that are not based on NIST Handbook 130 and (iv) one has no specific laws or regulations in this regard.

E2.3 This appendix provides a summary of NIST Handbook 130 provisions relevant to wood panels, with specific references to sections of the 2009 version. This summary is not intended to be comprehensive, but is offered as guidance. For additional information, a complete copy of the most recent version of NIST Handbook 130 is available at http://ts.nist.gov/WeightsAndMeasures/Publications.

E3 Scope and definitions

E3.1 Except for packages intended for export, the Uniform Packaging and Labeling Regulation of NIST Handbook 130 applies to consumer and non-consumer packages.

E3.1.1 Consumer package

"[A] package that is customarily produced or distributed for sale through retail sales agencies or instrumentalities for consumption or use by individuals for the purposes of personal care or in the performance of services ordinarily rendered in or about the household or in connection with personal possessions." (See Section 2.2 of the Uniform Packaging and Labeling Regulation).

E3.1.2 Non-consumer package

"Any package other than a consumer package, and particularly a package intended solely for industrial or institutional use or for wholesale distribution." (See Section 2.3 of the Uniform Packaging and Labeling Regulation.)

E3.2 The requirements of the Uniform Packaging and Labeling Regulation set forth in NIST Handbook 130 are to be set forth generally on labels and/or principal display panels.

E3.2.1 Label

"Any written, printed, or graphic matter affixed to, applied to, attached to, blown into, formed, molded into, embossed on, or appearing upon or adjacent to a consumer commodity or a package containing any consumer commodity, for purposes of branding, identifying, or giving any information with respect to the commodity or to the contents of the package, except that an

inspector's tag or other nonpromotional matter affixed to or appearing upon a consumer commodity shall not be considered a label requiring the repetition of label information required by this regulation." (See Section 2.5 of the Uniform Packaging and Labeling Regulation.)

Note: For the purpose of structural wood panels, the "label" encompasses information that is attached to or affixed to the panel or to the panel bundle prior to shipping from the mill. At the retail level, the label may encompass information that is adjacent to the panels.

E3.2.2 Principal display panel

"[t]hat part, or those parts, of a label that is, or are, so designed as to most likely be displayed, presented, shown, or examined under normal and customary conditions of display and purchase. Wherever a principal display panel appears more than once on a package, all requirements pertaining to the 'principal display panel' shall pertain to all such 'principal display panels.'" (See Section 2.7 of the Uniform Packaging and Labeling Regulation.)

E4 Declaration of identity and responsibility

E4.1 The package of wood panels must be labeled with the product identity and with the panel producer.

E4.2 Product identity

The name of the panel product should be included on the principal display panel for consumer packages and on the outside of the package for non-consumer packages. (See Sections 3.1 (consumer) and 4 (non-consumer) of the Uniform Packaging and Labeling Regulation). The product identity for consumer packages should be parallel to the base on which the package rests as it is designed to be displayed. (See Section 3.1.1 of the Uniform Packaging and Labeling Regulation.)

E4.3 Product responsibility

The company name should be included on the label of the package. (See Section 5 of the Uniform Packaging and Labeling Regulation.)

E4.3.1 The company identification on the label should include city, state and zip code of the company. (See Section 5 of the Uniform Packaging and Labeling Regulation.)

E5 Declaration of quantity

E5.1 The following guidance on Declaration of Quantity is based on the requirements for "Consumer Packages." Deviations based on "Non-Consumer Packages" are provided in [brackets].

E5.2 Quantity should be expressed in terms of count combined with appropriate declarations of the weight, measure and/or size of the individual units unless a declaration of count alone is fully informative but, if there exists a firmly established general consumer usage and trade custom with respect to the terms used in expressing a declaration of quantity of a particular commodity, such declaration of quantity may be expressed in its traditional terms if such traditional declaration gives accurate and adequate information as to the quantity of the commodity. (See Sections 6.4 and 6.4.1 of the Uniform Packaging and Labeling Regulation.) [There is no stated requirement regarding additional measurements other than count for non-consumer packaging. In other words, count or established trade custom is the requirement for non-consumer packages. (See Section 7.3 of the Uniform Packaging and Labeling Regulation.)]

E5.3 General Rules

E5.3.1 The size quantity declaration must be expressed in metric system units (meter (m), centimeter (cm) or millimeter (mm)) and in inch-pound system units (yard (Yd), foot (ft), inch (in.)). (See Sections 6.1 (Note 3), 6.5, 6.5.1, 6.7 and 6.7.1 of the Uniform Packaging and Labeling Regulation.) [The same rules apply to non-consumer packages except that either or both the metric system units and the inch-pound system units may be used. (See Sections 7.1 (Note 6), 7.4, 7.4.1, 7.5 and 7.5.1 of the Uniform Packaging and Labeling Regulation.)]

X5.3.2 The size quantity should be expressed in terms of the largest whole unit. (See Section 6.2 of the Uniform Packaging and Labeling Regulation.) [The same rules apply to non-consumer packages. See Section 7.2 of the Uniform Packaging and Labeling Regulation.]

- Remainders for the metric system units should be expressed as decimals. (See Section 6.2 of the Uniform Packaging and Labeling Regulation). [The same rules apply to non-consumer packages. See Section 7.2 of the Uniform Packaging and Labeling Regulation.]
- If less than 1 m, then length measure is expressed in terms of cm or mm. See Section 6.6.1(a) of the Uniform Packaging and Labeling Regulation. [No comparable rules for non-consumer.]
- If greater than 1 m, then length is expressed in m with decimal fractions. See Section 6.6.2(a) of the Uniform Packaging and Labeling Regulation. [No comparable rules for non-consumer.]
- Metric system measurements should go 3 digits out except where the quantity is below 100 mm or cm, where it may be shown in 2 digits. In any case, any final zero appearing to the right of the decimal point need not be shown. See Section 6.5(g) of the Uniform Packaging and Labeling Regulation. [Same rules for non-consumer packages. See Section 7.4 of the Uniform Packaging and Labeling Regulation.]
- Remainders for the inch-pound system units should be expressed in common fractions or decimal fractions of the largest whole unit or in the next smaller whole unit with any further remainder in terms of common or decimal fractions of the smallest unit present. See Section 6.2 of the Uniform Packaging and Labeling Regulation. [Same rules for non-consumer packages. See Section 7.2 of the Uniform Packaging and Labeling Regulation.]
- If less than 1 ft, then length is expressed in terms of in. See Section 6.8.1(a) of the Uniform Packaging and Labeling Regulation. [No comparable rules for non-consumer.]
- If greater than 1 ft, then length is expressed in terms of the largest whole unit (Yd or ft) with any remainder expressed in inches and fractions of the inch or in fractions of the ft or Yd, except that it shall be optional to include a statement of length in terms of inches. See Section 6.8.2(a) of the Uniform Packaging and Labeling Regulation. [No comparable rules for non-consumer.]
- A common fraction is reduced to its lowest term. A decimal fraction shall not be carried out more than 3 decimal places. See Section 6.11 of the Uniform Packaging and Labeling Regulation. [No comparable rules for non-consumer.]

E5.3.2. Rules specific to bi-dimensional commodities [No comparable rules for non-consumer.]

- Must be expressed in both metric and inch-pound units. No declaration of area is required for commodities for which the length and width measurements are critical in terms of end use if such commodities clearly present the length and width measurements on the label. (See Section 6.9 of the Uniform Packaging and Labeling Regulation).
- If the area is 37.1 dm^2 (4 ft^2) or more, in terms of the length and width, in terms of the largest whole unit, provided bi-dimensional commodities with a width of 10 cm (4 in.) or less, the inch-pound statement of width shall be expressed in terms of linear inches and fractions thereof, and length shall be expressed in the largest whole unit (yard or foot) with any remainder in terms of fractions of the yard or foot, except that it shall be optional to express the length in the largest whole unit followed by a statement of length in inches or to express the length in inches followed by a statement of length in the largest whole unit. An inch-pound dimension of less than 2 ft may be stated in inches. (See Section 6.9(c) of the Uniform Packaging and Labeling Regulation).

Examples:

5 cm x 9.14 m (2 in. x 10 yd), or

5 cm x 9.14 m (2 in. x 10 yd) (360 in.), or

5 cm x 9.14 m (2 in. x 360 in.) (10 yd)

E5.3.3 The required quantity declaration may be supplemented by one or more declarations of weight, measure, or count, such declaration appearing other than on a principal display panel. Such supplemental statement of quantity of contents shall not include any term qualifying a unit of weight, measure, or count that tends to exaggerate the amount of commodity contained in the package (e.g., "giant" quart, "larger" liter, "full" gallon, "when packed," "minimum," or words of similar import.) (See Section 6.12 of the Uniform Packaging and Labeling Regulation). *[No such provision applies to non-consumer packages.]*

E5.3.4 In no event, may any declaration of quantity be qualified by the addition of the words "when packed," "minimum," or "not less than" or any words of similar import (e.g., "approximately"), nor shall any unit of weight, measure, or count be qualified by any term (such as "jumbo,", "giant," "full," or the like) that tends to exaggerate the amount of commodity. (See Section 6.14 of the Uniform Packaging and Labeling Regulation.) *[No such provision applies to non-consumer packages.]*

E6 Prominence and placement

E6.1 General

All information required to appear on a consumer package shall appear thereon in the English language and shall be prominent, definite, plain, and conspicuous as to size and style of letters and numbers and as to color of letters and numbers in contrast to color of background. Any required information that is either in hand lettering or hand script shall be entirely clear and equal to printing in legibility. (See Section 8.11 of the Uniform Packaging and Labeling Regulation.) [All information required to appear on a non-consumer package shall be definitely and clearly stated thereon in the English language. Any required information that is either in hand lettering or hand script shall be entirely clear and equal to printing in legibility. (See Section 9.1 of the Uniform Packaging and Labeling Regulation.)]

E6.2 Location

The declaration or declarations of quantity of the contents of a package shall appear in the bottom 30 % of the principal display panel or panels. (See Section 8.1.1 of the Uniform Packaging and Labeling Regulation.)

E6.3 Style of type and lettering

The declaration or declarations of quantity shall be in such a style of type or lettering as to be boldly, clearly, and conspicuously presented with respect to other type, lettering, or graphic material on the package. (See Section 8.1.2 of the Uniform Packaging and Labeling Regulation.)

E6.4 Color contrast

The declaration or declarations of quantity shall be in a color that contrasts conspicuously with its background. (See Section 8.1.3 of the Uniform Packaging and Labeling Regulation.)

E6.5 Free area

The area surrounding the quantity declaration shall be free of printed information: (a) above and below, by a space equal to at least the height of the lettering in the declaration, and (b) to the left and right, by a space equal to twice the width of the letter "N" of the style and size of type used in the declaration. (See Section 8.1.4 of the Uniform Packaging and Labeling Regulation.)

E6.6 Parallel quantity declaration

The quantity declaration shall be presented in such a manner as to be generally parallel to the declaration of identity and to the base on which the package rests as it is designed to be displayed. (See Section 8.1.5 of the Uniform Packaging and Labeling Regulation.)

E6.7 Height and proportion of numbers and letters

Table 1 sets forth minimum heights of numbers and letters based upon the area of the principal display panel. The minimum height of numbers and letters for an area of 400 in^2 or greater is ½ in. The height of each number of a common fraction must meet ½ the minimum height standard. No number or letter may be more than 3X as high as it is wide. (See Sections 8.2.1 and 8.2.2 of the Uniform Packaging and Labeling Regulation.)

APPENDIX F. (Nonmandatory)

Wood Structural Panels as Green Building Materials

F1 Overview

There is a growing emphasis world-wide to recognize the importance of protecting the environment. This is commonly referred to as being "green" and has resulted in a need to increase the awareness of wood as an environmentally friendly or green building material. Wood structural panels, as members of the broader wood products "family" have numerous green attributes and are considered to be environmentally friendly.

F2 Green attributes of wood

Solar energy – powered by solar energy collected by the tree's leaves, carbon dioxide extracted from the atmosphere is combined with water and nutrients absorbed through the tree's roots to form a composite of hollow cellulose fibers bound in a matrix of lignin by photosynthesis.

Renewable – as mature trees are harvested they are replaced by younger trees and the wood resource is renewed. This natural renewal can continue indefinitely as long as there is an ample source of water, carbon dioxide and sunlight.

Sustainable – through responsible forest management the forest resource can be sustained at levels far exceeding their harvesting. Responsible forest management is the key to minimizing adverse environmental impacts associated with the extraction of timber from forests. (Society of American Foresters (SAF), www.safnet.org)

Embodied Energy – studies have shown that wood has low embodied energy compared to most other structural materials. The energy consumed in managing forests, harvesting trees, milling timber into various end products and transporting the finished wood products to job sites is relatively small. (CORRIM, www.corrim.org)

Carbon Sequestration – scientific evidence suggests that increasing levels of carbon dioxide in the atmosphere is one cause of accelerated climate change. Trees absorb CO_2 from the atmosphere through photosynthesis, storing it as carbon in their organic matter and releasing the remaining oxygen back into the atmosphere. On average a typical tree absorbs, through photosynthesis, the equivalent of 56 pounds of carbon dioxide for every cubic foot of growth, while producing the equivalent of 45 pounds of oxygen. (adapted from Edinburgh Centre for Carbon Management)

Life Cycle Assessment – Life Cycle Assessment (LCA) is important because it quantifies how a building product or system affects the environment during each phase of its life: extraction, production, installation, use and disposal or re-use. (International Organization for Standardization, ISO 14040, 14042 and 14043)

Several CORRIM reports address many of these attributes and provide extensive scientific data supporting the relatively minimal impact that producing wood products has on the environment.

F3 Sustainable forest management programs

There are four generally recognized sustainable forest management programs with the approximate amount of acres covered in North America for each shown in parentheses:

The *Canadian Standards* Association (CAN/CSA-Z809), (192 million acres) www.csa-international.org/product_areas/forest_products_marking

The *Sustainable Forestry Initiative® (SFI)*, (143 million acres) www.sfiprogram.org

The *Forest Stewardship Council (FSC)*, (82 million acres) www.fscus.org

The *American Tree Farm System (ATFS)* (27 million acres) www.treefarmsystem.org

All of these sustainable forest management programs are intended to ensure that forestry is practiced in an environmentally responsible, socially beneficial, and economically viable way.

The CSA, FSC, and SFI programs currently have criteria for on-product labeling of certified wood products. Each has a system for manufacturing facilities to track the percentage of fiber that originates from certified forests.

F4 Major green building rating systems

To account for and quantify the effects of building construction on the environment, three major green building rating systems have evolved. These are the:

Green Building Initiative (GBI) Green Globes: this is a rating system for new commercial building construction and has been approved as an ANSI Standard. www.thegbi.org

National Green Building Standard: this is a program to rate residential construction and has been approved as an ANSI Standard with ICC and NAHB jointly sponsoring the standard. www.nahbgreen.org

USGBC LEED™ which has four distinct rating programs including, LEED for New Construction; LEED™ for New Construction; LEED™ for Existing Buildings (Remodeling); LEED™ for Commercial Interiors and LEED™ for Homes. www.usgbc.org/LEED

Each of these programs considers the impact of various environmental considerations and assigns points accordingly to achieve a green rating threshold.

While there are similarities in these rating systems there are also differences that can impact the wood products industry. The GBI Green Globes and the National Green Building Standard both award points for wood being a renewable resource, for wood products harvested from any of the four forest certification programs and for using LCA to compare building materials and systems. The USGBC LEED™ program only awards points for products that are renewed within a 10 year harvest cycle thus excluding most structural wood products, only awards points for wood products manufactured from FSC certified forests and does not consider LCA as a science based evaluation tool.

APPENDIX G. (Nonmandatory)

Formaldehyde

G1 General

Formaldehyde is a simple naturally occurring chemical made of carbon, oxygen and hydrogen. It is produced by the human body and animals and plants. It is also formed by combustion and is an industrial chemical widely used in the manufacture of many consumer products. Background information on formaldehyde and health concerns related to elevated levels in indoor air can be found at www.epa.gov/iaq/formalde.html.

G2 Formaldehyde regulations

G2.1 There are no national or state regulations of formaldehyde emissions expressly stated for PS 2 structural panels. This is mainly due to the very low emission rates demonstrated by PS 2 Structural Panels.

G2.2 U.S. Department of Housing and Urban Development Rules and Regulations 24 CFR 3280 for manufactured housing includes § 3280.308 "Formaldehyde emission controls for certain wood products", that deals with formaldehyde emissions from particleboard and plywood. The regulations establish limits for formaldehyde emission levels and ongoing evaluation requirements as follows:

(b) Product certification and continuing qualification. All plywood and particleboard materials to be installed in manufactured homes which are bonded with a resin system or coated with a surface finish containing formaldehyde, other than an exclusively phenol-formaldehyde resin system or finish, shall be certified by a nationally recognized testing laboratory as complying with paragraph (a) of this section.

PS 2 Plywood is made predominantly with phenol-formaldehyde adhesives. When made as such, it is exempt from the HUD requirements. Other PS 2 Structural Panels are not explicitly referenced in the HUD requirements.

G2.3 California Air Resources Board (CARB) Air Toxic Control Measure for Composite Wood Products (see: http://www.arb.ca.gov/research/indoor/formaldehyde.htm)

The CARB ATCM for Composite Wood was approved for implementation on January 1, 2009. The scope of the standard is particleboard, Medium Density Fiberboard (MDF) and hardwood plywood. Section § 93120.1 "Definitions" explicitly excludes PS 2 Structural Panels and other structural wood products from the scope of the standard as follows:

> (8) "Composite wood products" means hardwood plywood, particleboard, and medium density fiberboard. "Composite wood products" does not include hardboard, structural plywood as specified in the "Voluntary Product Standard - Structural Plywood" (PS 1-07), structural panels as specified in the "Voluntary Product Standard – Performance Standard for Wood-Based Structural-Use Panels" (PS 2-04), structural composite lumber as specified in "Standard Specification for Evaluation of Structural Composite Lumber Products" (ASTM D 5456-06), oriented strand board, glued laminated timber as specified in "Structural Glued Laminated Timber" (ANSI A190.1-2002), prefabricated wood I-joists as specified in "Standard Specification for Establishing and Monitoring Structural Capacities of Prefabricated Wood I-Joists" (ASTM D 5055-05), finger-jointed lumber, or "composite wood products" used inside of new vehicles as defined in Section 430 of the California Vehicle Code (excluding recreational vehicles), railcars, boats, aerospace craft, or aircraft.

G2.4 National "Formaldehyde Standards for Composite Wood Act"

The Formaldehyde Standards for Wood Composites Act was signed into law on July 7, 2010 and goes into effect in 2013. With respect to PS 2 panels, this law is identical to the CARB ATCM for Composite Wood (see Section G2.3). PS 2 panels are exempt from the scope of the Formaldehyde Standards for Composite Wood Act.

See: http://www.govtrack.us/congress/bill.xpd?bill=s111-1660.

G3 Formaldehyde emission from PS 2 Structural Panels

G3.1 Information on formaldehyde emission from PS 2 panels is available from APA in report SPE-1040, "Structural Wood Panels and Formaldehyde."

結構用木質板之性能標準

1. 範圍

1.1 本自願性產品標準主要是建立結構用木質板用作施工護板及單層樓板時的可接受性評估的結構準則，並且為生產者、經銷商和產品使用者之間的共識提供一基礎。本標準並沒有涵蓋非結構性問題，例如抗生物製劑。除了建築中施工護板和單層樓板護板的應用外，本標準並沒有考慮可能需要進一步工程考量的其他類型應用。

1.2 本標準涵蓋了結構板性能要求，膠合性能，板的構造及工藝，尺寸及許可差，標識及含水率的要求。

1.3 本標準包含確認產品符合性的測試方法及一些貿易專業的術語和定義。品質認證程序由認可的檢驗機構提供檢視、抽樣及測試程序並根據本標準對產品進行認證。附錄 A 提供了根據業者之實務進行複檢的資料。附錄 B 為認證流程圖。附錄 C 為本標準的管理、原由及現行版本資訊。附錄 D 為產品厚度之商標要求，附錄 E 為標籤條例，附錄 F 為結構用木質板的環境屬性，附錄 G 為甲醛釋放量的相關資料。

1.4 本標準採用國際單位（SI）及美制單位。並以 SI 單位為準，括弧內的單位僅作參考。為了更容易辨識，通常對一些精度要求不是很高的數值（如釘間距）從美制單位轉換成 SI 國際單位時取一個大約數值。對於一些問題如板厚度等則採精確轉換。對於常使用的美制單位，採精確的轉換成 SI 國際單位。

1.5 本標準的建議備註為非強制性條款。

2. 用語及定義

2.1 複合板

任何由單板及其他木質材料組合而成的板。

2.2 剝離

對於合板或複合板，剝離即是層間的可見分離，所謂層間通常指在其界面佈膠並通過加壓作業將不同層緊密接合。木材本身缺陷如面裂、重疊、劈裂及木理斷裂等不被認為是剝離。

2.3 原料

木質材料如粒片或木片，以及包含膠合劑，蠟及其他添加劑等，均為板坯成型板類的主要組成分。

2.4 板坯成型板

任何不包含單板的木質板，並且是依據用語及定義中的結構板組成者。

2.5 工廠規範

一文件，其中定義了產品性能或可能會影響其產品分類（如第 4 節），以及(或)本標準中相關產品性能的要求。工廠規範是特別發給每種經認證的該等級產品，同時工廠規範也作為驗證機構審核的品質要求依據。

2.6 耐水膠合膠

膠合劑膠合成結構板的能力，在某種程度上可滿足本標準的膠合力分類要求。

2.7 OSB 定向粒片板

OSB 是定向粒片板花板英文首字母縮寫，分層之定向可形成在其方向上性能比較好的一種板坯成型板。

2.8 性能等級

依據厚度規格所指定的板種類係參照國際建築規範和國際住宅規範中所指定的板類標稱厚度。商標運用可以依照 5.2.1.2 中的定義，進行首字母縮寫，如 PERF CAT, CAT 或者全拼 Category。

2.9 性能標準

本標準是針對有性能標準的商標產品。該性能是以測試該產品在近似預期的最終用途得到的。

2.10 合板

傳統的全單板組成之板，且各單板交替層在應用時相互垂直。對於全單板之板類，一層可以是一片或兩片或兩片以上的單板厚度，且相鄰單板間其木理方向為平行。

2.11 PS 1

為結構用合板的自願性產品標準 PS 1-09。該標準應提供適用的以及符合特定應用的產品之要求。

2.12 參考值

根據工廠規範建立的有關物理或力學性質的特定數值。

2.13 試體

一組用於一次分析的試片。

2.14 試片平均值

測試平均值，通過對一定數量測試結果總和並除以試片數量得到的值。

2.15 試片標準差

衡量測試變異性的值，根據下述公式計算：

$$S=\sqrt{\frac{\Sigma x^2-\frac{(\Sigma x)^2}{n}}{n-1}}$$

其中：

S =試片標準差

x = 測試結果

n = 試片數量

2.16 次等板

木質板由於自身缺陷不符合板等級而被評為等級之外產品，這種板是除了膠合品質，其他都仍要滿足標準要求。此類板應按照標準中 8.3.1 的說明單獨標示。

2.17 試片

進行單獨一次測試的樣品。

2.18 強度軸

平行於板正面和背面木片配向或單板木理的軸向，除非特別說明，通常是指板的長度方向。

2.19 結構用板

結構用板材主要由木材組成，其作為商用主要是使用其確定的力學和/或物理性質作為產品性能。此類產品透過一認可的檢測機構和經過檢驗的商標證明，其符合一項或多項最終用途性能的要求，並在適用時，獲得國家主管機構對單層樓板或護板可使用於屋面、樓面或牆的批准。此類板應清楚標示其最終的用途。用"結構用板"用語表示此類板材。國際建築規範和國際住宅規範（見第 3.2 節）參照 PS2 標準稱其為"結構板用"。

2.20 測試暴露條件

板在測試之前的暴露條件。下列項適用於在性能測試過程中的濕度條件

(a) 乾燥測試條件：板的含水率與出廠含水率相差±3%。

(b) 潮濕測試條件：板的一面潮濕超過 3 天之含水率。

(c) 潮濕/再乾燥測試條件：在一面潮濕 3 天 後，板的含水率再乾燥到與出廠含水率相差±3%。

(d) 出廠含水率：板從工廠運輸出廠時的含水率。

3 相關標準

3.1 ASTM 標準 1

E 2-05 Standard Test Methods for Conducting Strength Tests of Panels for BuildingConstruction

E 661-03 Standard Test Method for Performance of Wood and Wood-Based Floor andRoof Sheathing under Concentrated Static and Impact Loads

D 1037-06a Standard Test Methods for Evaluating Properties of Wood-Base Fiber andParticle Panel Materials

D 1761-06 Standard Test Methods for Mechanical Fasteners in Wood

D 3043-00 (2006) Standard Test Methods for Structural Panels in Flexure

D 4442-07 Standard Test Methods for Direct Moisture Content Measurement of Wood andWood-Base Materials

D 2915-03 Standard Practice for Evaluating Allowable Properties for Grades of Structural Lumber

3.2 其他文件

Voluntary Product Standard PS1-09–Structural Plywood 2CSA-O325.0-2007 Construction Sheathing 3

International Building Code®. International Code Council. Country Club Hills, IL.

International Residential Code® for One- and Two-Family Dwellings. International Code Council. Country Club Hills, IL.

4 分類

4.1 總則

本標準中的結構用板規定了膠合類型，跨度分等，性能分類及等級。

4.2 膠合類型

膠合類型與預期使用環境下膠合的耐水能力有關，而與板的物理(腐蝕、紫外線)或生物（黴、腐朽菌，蟲蟻等）性能無關。

4.2.1 戶外級

結構用合板的一種膠合類型，適用於重複的潮濕與乾燥或長期露天暴露或其他類似的惡劣情況。

4.2.1.1 暴露 1 級

板的一種膠合類型，適用於非永久性的露天暴露。板的分類為暴露 1 級目的在於抵抗由於施工延誤或其他類似情況下的水分對板材結構性能的影響。

4.2.2 等級

本標準中涵蓋的結構用板之等級係根據護板，結構 I 護板及單層樓板等之應用所設計和製造。

4.2.3 護板

一種結構用木質板用作建築上覆面材料當根據跨度分等固定到支撐上，如屋面、底層樓板及牆板。

4.2.4 結構 I 護板

除了與 4.2.3 的描述一致外，本標準中的結構 I 護板還應滿足額外的特性如板橫向的強度和剛度以及抵抗側向載重的能力。

4.2.5 單層樓板

一種結構用木質板根據跨度分等進行緊固在支撐上，其作用可視為底層樓板及墊板的組合。

4.2.6 跨度等級

以美制單位的標示數值，用以確認正常使用情況下，在該用途的最大支點中心至中心間的間距。跨度表示法係根據不同用途，如作為屋面、牆面、底層樓板及單層樓板而定。通常以單一數值表示為牆面（Wall.24）及單層樓板（Floor.24 o.c.），而屋面及底層樓板通常合併為一個分數的形式表示。如跨度等級為 32/16 時，即用於屋面跨度為 32 英吋，底層樓板跨度為 16 英吋。

4.2.7 性能類別

板材的指示與國際建築規範（IBC）以及國際住宅規範(IRC)中的板材厚度規格有關。其標識方法，如 5.2.1.2 中所述，可以是縮寫字母 PERT CAT, CAT 或者 Category。

5 要求

5.1 總則

符合本標準的結構用板應滿足標準所有相關要求。

5.2 整體要求

5.2.1 板的尺度許可差及方正性

5.2.1.1 尺寸

製品的長度和（或）寬度的許可差為±1.6 mm（1/16 in.）。

5.2.1.2 性能類別及厚度許可差

商標之標示性能類別為 20.5 mm（13/16 in.）或更小時，其厚度許可差為±0.8 mm（公制單位）或 1/32 in.（英制單位），當商標之標示性能類別大於 20.5 mm 時，厚度許可差為±5%，除非品質實驗測得了更精確的許可差。

使用具有直徑 19.1 mm（3/4 in.）（偏差為+1.3 mm [0.050 in.]）平面測頭的千分錶測量板材的厚度。於平面測頭施予之壓力應

不小於 34 kPa (5 psi) 或大於 69 kPa (10 psi) 進行。測量位置應在板四邊的中間位置，並取四個測量值的平均值作為該板的厚度。如果該量測點包含該板材性能等級容許之缺點且會影響板厚度量測之數值，則該測量點應移開。板材厚度應符合表 1 中所示的板厚度。

表 1 板厚度基準

厚度基準[a]		
性能分類[b]	最小厚度 mm(in.)	最大厚度 mm(in.)
1/4 PERF CAT	5.56 (0.219)	7.14 (0.281)
5/16 PERF CAT	7.14 (0.281)	8.73 (0.344)
11/32 PERF CAT	7.94 (0.313)	9.53 (0.375)
3/8 PERF CAT	8.73 (0.344)	10.32 (0.406)
7/16 PERF CAT	10.32 (0.406)	11.91 (0.469)
15/32 PERF CAT	11.11 (0.438)	12.70 (0.500)
1/2 PERF CAT	11.91 (0.469)	13.49 (0.531)
9/16 PERF CAT	13.49 (0.531)	15.08 (0.594)
19/32 PERF CAT	14.29 (0.563)	15.88 (0.625)
5/8 PERF CAT	15.08 (0.594)	16.67 (0.656)
23/32 PERF CAT	17.46 (0.688)	19.05 (0.750)
3/4 PERF CAT	18.26 (0.719)	19.84 (0.781)
13/16 PERF CAT	19.84 (0.781)	21.43 (0.844)
7/8 PERF CAT	21.11 (0.831)	23.34 (0.919)
1 PERF CAT	24.13 (0.950)	26.67 (1.050)
1-1/8 PERF CAT	27.15 (1.069)	30.00 (1.181)
1-1/4 PERF CAT	30.16 (1.188)	33.34 (1.313)

[a] 當板性能類別為 13/16 或少於 13/16，該厚度要求之許可差為±0.8 mm (1/32 in.)。當板性能類別大於 13/16，厚度要求是±5%，較小的厚度許可差可通過測試確定。

[b] 對於標示方法，可簡稱為"性能類別"，PERF CAT，CAT 或 Category。

5.2.1.3 方正性及直線性

矩形板沿長邊的對角線長度差應在 1.3 mm/m (1/64 in/foot) 以內，且從板一角到臨近邊角的的直線，該直線與板緣的距離不超過 1.6 mm (1/16 in.)。

5.2.2 木質材料

5.2.2.1 單板

任何木材單板作為板的構件應符合適用的單板等級且加工處理品質應滿足自願性產品標準 PS1 的要求。

建議：於 PS2 對應的加拿大標準 CAN/CSA-O325.0，其木紋面上的節和節孔尺寸不超過 76 mm (3 in.)。

5.2.2.2 其他材料

其他用於板材生產的材料應包含將實木打碎獲得的粒片或纖維。

5.2.3 設計及施工

按跨度等級認證的板有三類：膠合板，複合板及平壓板。不同產品見第 2 章的術語解釋。板材應在滿足第 5.3 條所適用的性能要求上，根據其板材用途進行跨度和等級的認證。

5.3 性能要求

根據本標準標示的結構用板應通過性能準則建立的三項內容：結構性能要求，物理性能要求，以及膠合能力要求。除非另有說明，5.3.1、5.3. 2 和 5.3.3 中列出了性能要求，適用於所有等級的結構用板。

5.3.1 結構性能

當板按照引用的測試程序檢測每一結構條件時，應滿足 5.3.1.1 節至 5.3.1.4 節中的性能要求求。第 6 節是對試片細節要求以及其他測試程序。

5.3.1.1 集中載重

板材應根據 7.1 節中的集中靜載重和衝擊載重程序進行測試。並且板材應符合表 2 中標示所顯示的等級與跨度要求。

結構 I 類護板和性能等級為 7/16 或更大的板材應根據 7.1 中的程序進行測試，且其框架構材應平行於板強軸方向，除了載重是位於板材中點位置。測試板的最小尺寸為 1220×2440 mm (48×96 in.)。框架構材之中心至中心間隔應為 610 mm (24 in.)。板材末端不得支撐在框架上。屋頂-24 之板材應符合表 2 之準則，參考 6.2.4.2 節中附加的節和節孔之測試要求。

5.3.1.2 均布載重

板材應根據 7.2 節均布載重的程序進行測試。且應符合表 3 中標示所顯示的等級與跨度要求。

結構 I 類護板應平行於板強軸方向進行測試。測試板的最小尺寸為 1220×1220 mm (48×48 in.)。框架構材之中心至中心間隔應為 610 mm (24 in.)。板材末端不得支撐在框架上，且應符合表 4 的細節要求。

5.3.1.3 牆體測試

對於牆跨度為 16 或 24 英吋，屋頂跨度為 16、20、24 英吋的護板應按照 7.3 節牆體測試之測試程序式進行測試。板材應符合表 5 中標示所顯示的性能分類的準則要求。

當按照 7.3 節進行測試時，結構 I 類護板應滿足表 5 中標示所顯示該等級的性能分類要求。

5.3.1.4 釘著力

板材應按照 7.4 節針對測向載重與垂直引拔載重條件的釘著力的測試程序進行測試。板材應滿足表 6 中標示所顯示的等級與性能分類要求。

5.3.2 物理性質

板當依照所引用測試方法進行測試時，板材應滿足 5.3.2.1 中的物理性質要求，在 6.2.3 節說明有關試片的要求細節及其他測試程序。

5.3.2.1 尺寸安定性

板材應根據下列線性膨脹測試程序中的任一種方法進行測試：

(a) 暴露在相對濕度 50%(±5%)，溫度為 21°C±6°C (70°F±10°F)，真空壓力浸漬。

板應根據 7.8 節 50%相對濕度的真空壓力浸漬條件下的線性膨脹的測試程序進行沿強軸和橫跨強軸測試。按照此方法測量的平均線性膨脹應不超過 0.50%。

(b)單側潤濕和相對濕度：板應根據 7.9 節單側潤濕的線性膨脹和厚度膨脹（僅限單層樓板）以及 7.10 節暴露相對濕度的線性與厚度膨脹（僅限單層樓板）測試程序進行測試。板的沿強軸的線性膨脹應不超過 0.30%，橫跨強軸之線膨脹不超過 0.35%。單層樓板的厚度膨脹應不大於 25%。

表 2 板類依據 7.1 節進行集中靜力及衝擊試驗之性能準則(見 6.2.2.1 節有關通過/未通過之準則)

跨度分級	試驗暴露條件[a]	性能準則					
		極限載重				0.89 kN(200 lbf)載重下之撓曲	
		靜力		後續衝擊[b]			
		kN	lbf	kN	lbf	mm	in.
屋頂-16	乾濕	1.78	400	1.33	300	11.1[c][d]	0.438[c][d]
屋頂-20[f]	乾濕	1.78	400	1.33	300	11.9[c][d]	0.469[c][d]
屋頂-24	乾濕	1.78	400	1.33	300	12.7[c][d]	0.500[c][d]
屋頂-32	乾濕	1.78	400	1.33	300	12.7[c][d]	0.500[c][d]
屋頂-40	乾濕	1.78	400	1.33	300	12.7[c][d]	0.500[c][d]
屋頂-48	乾濕	1.78	400	1.33	300	12.7[c][d]	0.500[c][d]
屋頂-54	乾濕	1.78	400	1.33	300	12.7[c][d]	0.500[c][d]
屋頂-60	乾濕	1.78	400	1.33	300	12.7[c][d]	0.500[c][d]
底層樓板-16	乾濕/再乾	1.78	400	1.78	400	4.8[c]	0.188[c]
底層樓板-20[f]	乾濕/再乾	1.78	400	1.78	400	5.6[c]	0.219[c]
底層樓板-24	乾濕/再乾	1.78	400	1.78	400	6.4[c]	0.250[c]
底層樓板-32	乾濕/再乾	2.45	550	1.78	400	5.3[c]	0.207[c]
底層樓板-48	乾濕/再乾	2.45	550	1.78	400	8.0[c]	0.313[c]

單層樓板-16	乾濕/再乾	2.45	550	1.78	400	2.0[e]	0.078[e]
單層樓板-20[f]	乾濕/再乾	2.45	550	1.78	400	2.4[e]	0.094[e]
單層樓板-24	乾濕/再乾	2.45	550	1.78	400	2.7[e]	0.108[e]
單層樓板-32	乾濕/再乾	3.11	700	1.78	400	2.2[e]	0.088[e]
單層樓板-48	乾濕/再乾	3.11	700	1.78	400	3.4[e]	0.133[e]

[a]濕/再乾是指暴露在濕潤連續三天而於乾燥狀態測定。濕是指暴露在濕潤連續三天且於濕潤狀態測定。乾是指在出廠時含水率條件的±3%之內的狀態。

[b]衝擊力在跨度分級 24 以下為 102 N·m (75 lbf·ft)，跨度分級 32 為 122 N·m (90 lbf·ft)，跨度分級 40 為 163 N·m (120 lbf·ft)，跨度分級 48 以上為 203 N·m (150 lbf·ft)。

[c]準則適用於靜力集中載重，不應用於後續衝擊。

[d]不應用於濕潤條件之撓曲。

[e]準則適用於靜力集中載重及後續衝擊。

[f]跨度分級 20 之標示是應用於跨距 19.2 吋。

表 3 板類依據 7.2 節進行均布載重試驗之性能準則(見 6.2.2.2 節有關通過/未通過之準則)

跨度分級	暴露試驗條件[b]	性能準則	
		載重下之平均撓度	極限均布載重

			kPa	lbf/ft^2
牆-16	乾	不適用	3.6[c]	75[c]
牆-24	乾	不適用	3.6[c]	75[c]
屋頂-16[a]	乾	1.7 mm at 1.68 kPa (0.067 in. at 35 lbf/ft^2)	7.2	150
屋頂-20[a] [d]	乾	2.0 mm at 1.68 kPa (0.080 in. at 35 lbf/ft^2)	7.2	150
屋頂-24[a]	乾	2.5 mm at 1.68 kPa (0.100 in. at 35 lbf/ft^2)	7.2	150
屋頂-32	乾	3.4 mm at 1.68 kPa (0.133 in. at 35 lbf/ft^2)	7.2	150
屋頂-40	乾	4.2 mm at 1.68 kPa (0.167 in. at 35 lbf/ft^2)	7.2	150
屋頂-48	乾	5.1 mm at 1.68 kPa (0.200 in. at 35 lbf/ft^2)	7.2	150
屋頂-54	乾	5.7 mm at 1.68 kPa (0.225 in. at 35 lbf/ft^2)	7.2	150
屋頂-60	乾	6.4 mm at 1.68 kPa (0.250 in. at 35 lbf/ft^2)	7.2	150
底層樓板-16	乾濕/再乾	1.1 mm at 4.79 kPa(0.044 in. at 100 lbf/ft^2)	15.8	330
底層樓板-20[d]	乾濕/再乾	1.3 mm at 4.79 kPa (0.053 in. at 100 bf/ft^2)	15.8	330
底層樓板-24	乾濕/再乾	1.7 mm at 4.79 kPa (0.067 in. at 100bf/ft^2)	15.8	330
底層樓板-32	乾濕/再乾	2.2 mm at 4.79 kPa (0.088 in. at 100bf/ft^2)	15.8	330
底層樓板-48	乾濕/再乾	3.4 mm at 3.83 kPa (0.133 in. at 80 lbf/ft^2)	10.8	225
單層樓板-16	乾濕/再乾	1.1 mm at 4.79 kPa (0.044 in. at 100 lbf/ft^2)	15.8	330
單層樓板-20[d]	乾濕/再乾	1.3 mm at 4.79 kPa (0.053 in. at 100 lbf/ft^2)	15.8	330

單層樓板-24	乾濕/再乾	1.7 mm at 4.79 kPa (0.067 in. at 100 lbf/ft^2)	15.8	330
單層樓板-32	乾濕/再乾	2.2 mm at 4.79 kPa (0.088 in. at 100 lbf/ft^2)	15.8	330
單層樓板-48	乾濕/再乾	3.4 mm at 3.83 kPa (0.133 in. at 80 lbf/ft^2)	10.8	225

[a]屋頂-16 級及屋頂-20 級板類亦應符合牆-16 級之性能要求，屋頂-24 級亦應符合牆-24 級之要求。

[b]濕/再乾條件應暴露於濕潤連續三天，再行乾燥，乾燥程度應在出廠時之含水率的±3%以內。

[c]除非另有指定，測試時板之強軸方向應沿著支點放置。

[d]跨度分級為 20 之標示是指實際使用之跨度為 19.2 吋。

表 4 結構 I 類護板依據 7.2 節進行均布載重試驗之性能準則(見 5.3.1.2 節及 6.2.2.2 節有關通過/未通過之準則)

跨度分級	暴露試驗條件 [a]	性能準則		
		載重下之平均撓度	極限均布載重	
			kPa	lbf/ft^2
7/16	乾	2.5 mm at 0.96 kPa (0.100 in. at 20 bf/ft^2)	4.3	90
15/32	乾	2.5 mm at 1.68 kPa (0.100 in. at 35 lbf/ft^2)	6.5	135

1/2	乾	2.5 mm at 1.92 kPa (0.100 in. at 40 lbf/ft^2)	7.2	150
19/32 & 5/8	乾	2.5 mm at 3.35 kPa (0.100 in. at 70 lbf/ft^2)	11.5	240
23/32 & 3/4	乾	2.5 mm at 4.31 kPa (0.100 in. at 90 lbf/ft^2)	14.4	300

[a] 乾燥程度應在出廠時之含水率的±3%以內。

表 5 依據下 3 節板類側向載重試驗性能準則(見 6.2.2.3 節有關通過/不符之準則)

性能種類	暴露試驗條件 (b)	釘尺寸(直徑×長度)		用釘間距				載重				性能準則[a]					
				板緣		內部間柱 (c)		護板		結構 I 類		載重試驗之撓度		極限載重			
														護板		結構 I 類	
		mm	in.	mm	in.	mm	in.	kN/m	lbf/ft	kN/m	lbf/ft	mm	in.	kN/m	lbf/ft	kN/m	lbf/ft
5/16 以下	乾	2.9×51	0.113×2.0	150	6	300	12	2.2	150	---	---	5.1	0.2	9.5	650	---	---
								4.4	300	---	---	15.2	0.6				
5/16	乾	2.9×51	0.113×2.0	75	3	300	12	5.1	350	---	---	5.1	0.2	14.3	980	---	---
3/8	乾	3.3×64	0.131×2.5	75	3	300	12	6.0	410	6.7	460	5.1	0.2	16.8	1150	18.8	1290
7/16	乾	3.3×64	0.131×2.5	75	3	300	12	6.6	450	7.4	505	5.1	0.2	18.4	1260	20.7	1415
15/32	乾	3.8×76	0.148×3.0	75	3	300	12	8.8	600	9.7	665	5.1	0.2	24.5	1680	27.1	1860
19/32 以上	乾	3.8×76	0.148×3.0	75	3	300	12	9.7	665	9.7	665	5.1	0.2	27.1	1860	27.1	1860

[a]牆-16、屋頂-16、屋頂-20 等板類之間柱中心間距採用 405 mm (16 in.)，其他跨度等級及所有結構 I 類護板之中心間距為 610 mm (6 in.)。

[b]乾之條件係指含水率為出廠時之±3%以內。

[c]在間柱間隔為 610 mm (24 in.)條件下，性能類別中板厚度在 7/16 等級以下者，其內部之間柱用釘間距應為 150 mm (6 in.)。

表 6 依 7.4 節板類在側向及垂直引拔載重進行測試之扣件性能準則(見 6.2.2.4 節有關通過/不符之準則)

						極限載重性能準則[c]			
等級	用途	性能類別	釘尺寸[a] (直徑×長度)		暴露試驗條件[b]	側向釘著力		垂直引拔力	
			mm	in.		N	lbf	N	lbf
護板	牆	1/2 以下	2.9×51	0.113×2.0	乾	778	175	[d]	[d]
		大於 1/2	3.3×64	0.131×2.5	濕/再乾	600	135	[d]	[d]
	屋頂	1/2 以下	2.9×51	0.113×2.0	乾	778	175	89	20
		大於 1/2	3.3×64	0.131×2.5	濕/再乾	600	135	67	15
	底層樓板	1/2 以下	2.9×51	0.113×2.0	乾	934	210	89	20
		大於 1/2	3.3×64	0.131×2.5	濕/再乾	712	160	67	15
單層樓板	樓板	1/2 以下	2.9×51	0.113×2.0	乾	934	210	89	20
		大於 1/2	3.3×64	0.131×2.5	濕/再乾	712	160	67	15

[a]胴身光滑之普通釘。

[b]濕/再乾條件係連續三天濕潤後再於乾燥條件測試，乾燥條件係指在出廠時含水率之±3%以內。

[c]表中數值係以 20 個試片在 75%信賴區間的 10%除外水準之值。

[d]不適用。

表 7 定向粒片板強軸方向依 7.6 節且依 7.16[a]節循環條件測試之暴露 1 準則(見 6.2.4.1(d)節有關通過/不符之準則)

性能類別	使用之跨度分級	彎曲容量(所需之力矩)	
		N-mm/mm	Lbf-in./ft
3/8	屋頂-24	310	830
7/16	屋頂-24/底層樓板-16	350	950
15/32 & 1/2	屋頂-32/底層樓板-16	380	1030
19/32 & 5/8	屋頂-40/底層樓板-20	450	1210
23/32 & 3/4	屋頂-48/底層樓板-24	640	1720
9/16	單層樓板-16	390	1060
19/32 & 5/8	單層樓板-20	420	1130
23/32 & 3/4	單層樓板-24	610	1650
7/8 & 1	單層樓板-32	1000	2690
1-1/8	單層樓板-48	1140	3060

[a]另可依 6.2.4.1.e 節所定義的程序建立膠合性能。

5.3.3 膠合性能

當按照所引用的測試方法檢測板類膠合系統的影響性質時，應滿足 5.3.3.1 節至 5.3.4.3 節中的性能要求。第 6.2.4 節是說明對樣品的要求以及其他測試程序。

5.3.3.1 膠合類型

結構板應滿足以下列出的膠合暴露類型的膠合要求。

(a) **室外合板**：合板應滿足 PS1 室外膠合類型的要求。合板之室外剝離是指在單一膠合層膠的可見的分離超過 19.4 cm^2 (3 $in.^2$)，且同時含有該等級板所允許的與節孔開裂、脂囊、劈裂，裂隙以及其他孔洞。

(b) **暴露 1 級合板**：暴露 1 級合板應滿足 PS1 中暴露 1 級之膠合要求。暴露 1 級合板在任何膠合層可見的剝離，且其超過 19.4 cm^2 (3 $in.^2$)除直接歸因於以下列出的特性外：

節和節孔：不超過該等級所允許之大小加上的 19.1 mm (3/4 in.)。

其他允許的等級特性：大小不超過該等級所允許之尺寸。

(c) **暴露 1 級複合板**：當按照 7.13 測試以及 7.17 水分循環測試時，暴露 1 級複合板應滿足 6.2.4.1 的剝離要求。暴露 1 級複合板的剝離沿著試片的邊緣或端部，或單板與單板之間以及單板與木質材料膠合層間，長度 25 mm (1 in.)，其深度不超過 6.4 mm (1/4 in.)。

(d) **暴露 1 級定向粒片板**：當按照 7.6 的測試方法以及 7.16 水分循環測試或按照 5.3.3.1(e)的測試程序進行測試時，暴露 1 級定向粒片板應滿足或超過表 7 的準則要求。

建議：表 7 中的數值是基於典型的工業生產板類的性能得出的，該性能滿足 6.2.2.1 節的結構性能要求，且滿足 7.7 節的

膠合性能以及 7.17 節的水分循環要求。

(e)**暴露 1 級板坯成型板**：板坯成型板和暴露 1 級木質材料複合板在按照 7.7 節以及 7.17 節水分循環測試要求進行測試時，應顯示最低的平均強度保留率 50%，且個別之板強度保留率應不低於 40%，

5.3.3.2 節與節孔處的膠合性能

暴露 1 級結構板按照 7.18 節和 7.19 節進行測試時應滿足 6.3.4.4 節的要求。

5.3.4 膠合劑性能

5.3.4.1 抗黴性能

板膠合力按照 6.2.5.1 節所定義及 7.14 節測試程序進行測試時應滿足抗黴性試驗要求。酚膠合劑和異氰酸酯膠合劑已經證明其抗黴性，應當視為滿足標準要求。

5.3.4.2 耐高溫膠合劑

當能滿足 5.3.3.1 節之性能要求的板類膠合劑也應視為能滿足耐高溫之要求(71°C [160°F])。

5.3.4.3 膠合劑之抗菌

板膠合力按照 6.2.5.3 節所定義的及 7.15 節測試程序進行測試時應滿足細菌試驗要求。酚膠合劑和異氰酸酯膠合劑已經證明其抗菌性，應當視為滿足標準要求。

5.4 含水率

根據 7.11 節要求，板類從製造商交貨到測試時，其含水率應小於 16%。

6 認證檢測及工廠規範

6.1 總則

本節說明試片測試要求之細節、一致性準則，其他測試項目和工廠規範。流程圖見附件 B。

6.2 認證試驗

6.2.1 總則

認證試驗是板類等級的性能測試。所需要的試驗與性能準則在第 5 節中有詳細描述。該節也提供了一致性準則和附加再試驗項目要求。

板類的認證試驗代表最低的性能要求。

試驗應根據製造商的應用規範進行，同時也要依據板類商標上所標明支承間距的用途認證進行。任何經改質的特殊產品當影響到其性能時，如濕潤或防水處理，都應依 6.3 節敘明。如提供在生產過程中沒有作任何改變，於認證測試時失敗規定應進行一系列的附加再試驗。如果產品滿足所規定的其他測試，則亦應為通過性能認證測試。如果沒有通過，產品的性能認證測試應是失敗的。如果改變產品的結構或加工方式，則應依認證機構所要求的附加再試驗進行。

6.2.2 結構性能

6.2.2.1 集中載重

從至少 10 張板上取最多 20 個試片進行測試。每一暴露條件測試的 10 個試片 (取自至少 5 塊板) 應根據 7.1 節對其集中靜力與衝擊載重進行認證評估。表 2 列出了具體要求。如果需要附加再試驗，應再取 10 個試片，最後將兩組結果合併起來。只允許進行一次附加再試驗。如果合併後的結果達到或超過最低通過率，則樣品通過。

(a)撓度：初始測試應包含 10 個試片。

平均撓度不得大於表 2 中相對應的要求。

如果所有值都小於要求，樣本通過。

如果兩個或三個值超過要求，需進行附加再試驗。

如果四個或更多值超過要求，所取之樣本為失敗。

如果加上附加再試驗 10 個試片，合併後的通過率應至少為 85%。

(b)極限載重：初始測試應包含 10 個試片。

平均載重不得小於表 2 中相應的要求。

如果所有的值達到或超過要求，樣本通過。

如果其中有一個值低於要求，需進行附加再試驗。

如果兩個或更多值低於要求，所取之樣本為失敗。

如果加上附加再試驗有 10 個試片，合併後的通過率應至少為 95%。

6.2.2.2 均布載重

從至少 10 張板上取最多 20 個試片進行測試。每一暴露條件測試的 10 個試片（取自至少 5 塊板）應根據 7.2 節對其均布載重能力進行認證評估。表 3 和表 4（結構 I 類）為測試之要求。如果需要其他測試，應再取 10 個試片，最後將兩組結果合併。只允許進行一次附加再試驗。如果合併後的結果達到或超過最低通過率，則樣品通過。

(a)撓度：平均撓度不得大於指定數值。初始測試應包含 10 個試片。

如果平均值低於要求，樣本通過。

如果平均值高於要求，需進行附加再試驗。

如果合併結果的平均值高於要求，所取之樣本為失敗。

(b)極限載重：初始測試應包含 10 個試片。

載重平均值不得小於表 3 中的相應要求。

如果所有的值達到或超過要求，樣本通過。

如果其中有一個值低於要求，需進行附加再試驗。

如果兩個或更多值低於要求，樣本失敗。

如果加上附加再試驗 10 個試片，合併後的通過率應至少為 95%。

6.2.2.3 牆體測試

根據 7.3 節評估兩組牆體。表 5 列出了具體要求。如果需要附加再試驗，應包含一組牆體，最後將該三組結果合併。只允許一次附加再試驗。

(a)撓度：平均撓度不得大於指定數值。初始測試應包含 2 個樣本。

如果平均值低於要求，樣本通過。

如果平均值高於要求，需進行附加再試驗。

如果合併結果的平均值高於要求，所取之樣本為失敗。

(b)極限載重：最低通過率為 100%。初始測試應包含兩個樣本。

如果只測試兩牆體，兩極限載重應在 10%以內。

如果兩個測試值低於要求，樣本失敗。

如果兩個測試值滿足要求但不在 10%以內，需進行附加再試驗。選用兩較低測試值估算 10%差異。

如果三面牆體的最小值測試超過了指定的最低極限載重，牆體評估通過。

6.2.2.4 釘著力

從至少 20 張板上取最多 40 個試片進行測試。測試每一暴露條件和性能應取 20 個試片（取自至少 10 張板），並應根據 7.4 節

對其側向載重及垂直引拔載重進行認證評估。表 6 列出測試之要求。如果需要採用附加再試驗，應再取 20 個試片，最後將兩組的 40 個結果合併起來。附加再試驗只允許一次進行測試。

極限載重：初始測試應包含 20 個試片。

如果不超過兩個值低於要求，樣本通過。

如果三個或四個值低於要求，需進行附加再試驗。

如果 5 個或更多值低於要求，所取之樣本為失敗。

如果加上附加再試驗 20 張板，合併後的結果的通過率應至少為 90%。

6.2.3 尺寸安定性

下面任一種線性膨脹試驗法及相關規範應滿足 5.3.2.1 節所列的等級要求。製造商所開發的任何特殊性能如塗裝或濕度調控，應滿足 6.3 的規定。

(a) **暴露在相對濕度為 50%(±5%)，溫度為 21°C±6°C(70°F ±10°F)，減壓加壓浸漬處理：**至少 10 個試片（取自至少 5 塊板）應根據 7.8 節 50%相對濕度的減壓加壓浸漬處理的線性膨脹的測試程序進行沿強度軸和橫軸方向測試。按照測試方法在相對濕度為 50%的減壓加壓浸漬處理測得的各板軸向的平均線性膨脹不得超過指定範圍。

附加再試驗：如果平均線膨脹超過 0.55%，測試為失敗。如果平均線膨脹不符要求，但沒有超過 0.55%，應另取 10 個試片進行附加再試驗。如果全部合併後的平均值滿足要求，則視為通過。

(b) **暴露于單側潤濕和相對濕度條件：**測試最多 20 個試片取自至少 10 張板。10 個試片應根據 7.9 節沿板強度軸和橫軸方向，在從收到樣板到進行單側潤濕暴露條件下對線性和/或厚度膨

脹進行測試。至少 10 個試片（取自至少 5 張板）應根據 7.10 節沿板強度軸和橫軸方向，暴露在相對濕度變化條件下對線性和/或厚度膨脹 進行測試。

如果不超過三個值高於要求，樣本為通過。

如果四個、五個或六個值超過要求，需進行附加再試驗。

如果七個或更多值超過要求，樣本為失敗。

如果附加再試驗試片為 10 個，則最小通過率為 70%。

每個板各軸向要單獨評估。初始測試包括 10 個試片。如果需要附加再試驗，應再取 10 個試片，最後將兩組結果合併計算。只允許進行一次附加再試驗。如果合併後的結果達到或超過最低通過率，則樣本通過。

6.2.4 膠合性能

6.2.4.1 膠合分類

膠合分類之性能試驗應如下進行：

(a) **室外用合板**：合板應滿足 PS1 室外用合板的膠合力要求。

(b) **暴露 1 級合板**：合板應滿足 PS1 暴露 1 級的膠合力要求。

(c) **暴露 1 級複合板**：根據 7.17 節，從至少每 20 張板中取一個樣本（至少 5 個試片）進行測試，並且根據 7.13 節在第 4 水分循環及第 6 水分循環計算剝離結果。至少 95%的樣本應通過 4 次水分循環測試，至少 90%的樣本應通過 6 次水分循環。暴露 1 級複合材料的剝離係沿著試片的邊緣或端部，或單板與單板之間以及單板與木基膠合層間，深度不超過 6.4 mm (1/4 in.)，延伸長度不超過 25 mm (1 in.).如果大於 85%且小於 90%的樣本通過了 7.17 的 6 次水分循環後剝離要求，根據 7.13 節之規定需再選取 20 個樣本進行附加再試驗。如果附加再試驗結果滿足要求，則視為樣本滿足膠合性能要求。

(d)**暴露 1 級定向粒片板**：定向粒片板應滿足本節或 6.2.4.1(e)節的要求。為了滿足本節要求，暴露 1 級定向粒片板應從至少 20 張板中取一個樣本(至少 2 個試片)根據 7.16 節水分循環後再根據 7.6 節測試平行方向強度。如果小於 1 個樣本低於表 7 的最低標準，則 20 張板的取樣測試應視為通過。如果四個或更多樣本低於最低要求，該測試視為失敗。如果兩個或三個樣本低於最低標準，應再選取 20 個樣本進行附加再試驗。40 張板合併後結果的通過率應大於或等於 92.5%。

(e) **暴露 1 級板坯成型板**：暴露 1 級板坯成型板應根據 7.17 節進行水分循環要求從至少每 20 張板中取一個樣本(至少 5 個試片)，根據 7.7 測試其殘留強度。方法如下：

$$RS = \frac{P_t}{P_c} \times 100$$

RS=樣本殘留強度(%)

P_t =循環後樣本 (5 個試片) 破壞載重平均值

P^c*=未經暴露樣本 (5 個試片) 破壞載重平均值

*未經暴露(對照組)試片是依送樣時之狀況下進行破壞試驗。

樣本經 6 次水分循環後測試應能有如規定之殘留強度。

附加再試驗：如果 20 個樣本的殘餘強度平均值符合要求，但均不符合指定的最低殘留強度，需增加測試 20 個樣本 (每個樣本均取自 20 張板)。40 張板的合併通過率應大於或等於 97.5%。

6.2.4.2 含節和節孔的合板膠合性能

當結構用途之合板分級為暴露 1 級應根據 7.18 節和 7.19 節進行試驗。測試樣本的節和節孔按照橫向木理測量其寬度，應大於 51 mm (2in.) 小於 76 mm (3in.)。20 個的樣本節和節孔根據 7.18 節試驗，另外 20 個根據 7.19 節進行試驗。根據 7.18 節測試含節和節孔的樣本應滿足表 2 及 6.2.2.1(a)節和 6.2.2.1(b)節乾

燥下靜力及衝擊的要求、一致性標準，以及附加再試驗選項的要求。對於每 20 個樣本，95%的樣本根據 7.19 節測得節與節孔邊界的徑向剝離延伸長以及沿著扇形之寬度剝離長或根據 7.19.4 節測得的連續扇形寬度的剝離長，均不應超過 19.1 mm(3/4 in.)。

附加再試驗：如果 20 個試片中不滿足測試要求的樣本不超過兩個，則需另外選取 20 個試片做附加再試驗。如果所有試片通過附加再試驗，應視為滿足要求。

6.2.5 膠合劑性能

6.2.5.1 膠合劑防黴

根據 7.14 節測試程式對四張板進行測試。

(a)如果每個測試組（參看 7.17.2 節的測試組說明）在 20 週之期間顯示膠合層平均剪斷載重至少為對照組的 90%，則合板可視為具有較好的抗黴性能。另外，低於 80%的應不超過兩組，低於 75%的不超過一組。

(b)若測試組平均值均不低於對照組平均值減去 1.8 倍標準差之值，則其他板類可視為具有較好的抗黴性能。

6.2.5.2 膠合劑耐高溫

滿足 6.2.4.1 節水分循環試驗要求的膠合劑可視為具有較好的耐高溫要求。

6.2.5.3 膠合劑防菌

根據 7.15 節之程序，至少要試驗 4 張板。

(a) 如果每個測試組（參看 7.15.2 節的測試組說明）在 12 週期間顯示平均載重至少為對照組的 80%，則合板可視為具有較好的膠合劑抗菌性。各組平均載重值均要高於對照組的 70%。

(b) 若測試組平均值均不低於對照組平均值減 1.8 倍的標準差，

則其他板類可視為具有較好的抗菌性。

6.3 工廠規範

當產品通過 6.2 節所列的性能認證測試後，工廠應有針對該特定產品的說明及書面的產品評估。

產品評估應基於本標準所產生之數值以及製造商為性能認證測試提供的相同材料之特性。參考值（參看 2.10 節）應在產品評估或本標準（參看第 5 節）的適用性能要求中確定，並應是後續生產的品質評估基礎。機械性質的參考數值可採用 6.3.2.1 節及 6.3.2.2 節。表 7 及表 8 列出小試體彎曲試驗之最小產業參考數值。依 7.6 節之工廠特定小試體彎曲數值或依 7.7 節之工廠特定 25.4×50.8 mm 彎曲參考數值可以採用認證機構所認可的方法進行。在合板及複合板方面，可以依用途的等級和施工的要求，以替代依品質評估目的的參考數值。這些數值或特性可以用於個別工廠的品質程序上以及合格的檢視及試驗機構的一項配合政策的檢視規劃(見 8.2 節)。

除了本節中所規定的板特性的性能評估，其他任何能影響產品認證的獨特的製造工藝技術都應包含在工廠規範中。包括特殊塗料、熱、水或化學處理、貼面、添加劑；或其他生產方面的製程。另外，根據 6.2.4.2 節試驗的節和節孔的最大尺寸應包含在工廠規範中。

6.3.1 板材構造

6.3.1.1 合板

在工廠規範中，板材應定義其樹種和單板結構，並且根據 6.3.2 節和 6.3.3 節（不包含 6.3.3.2 節）進行評估。

6.3.1.2 複合板

木質材料應根據 6.3.2 節，6.3.3.1 節和 6.3.4 節的要求進行評估。另外，砂光板（單板型）應根據 6.3.2 節、6.3.3.1 節、6.3.3.3 節和 6.3.4 節的規定進行評估。

6.3.1.3 板坯成型板

板坯成型板應根據 6.3.2 節、6.3.3 節和 6.3.4 節規定進行評估。

6.3.2 力學性質

6.3.2.1 大型板抗彎剛性和強度

20 個試片（試片取自 10 張板）應根據 7.5 節的測試程序對其沿強軸和橫軸的抗彎剛性進行評估。

每張板方向的剛性參考值應採用在平均值的 90%的信賴區間值。

每張板方向的強度參考值應當是最低觀測值與樣本平均值減去 1.8 倍標準偏差值中，二者中的較高值。

6.3.2.2 小試體抗彎剛性和強度

對於定向粒片板和其他板坯成型板，取自至少 10 張板的 20 個樣本（至少 2 個試片）應根據 7.6 節的測試程序測試其乾燥條件下強軸和橫軸的抗彎強度和剛性。

表 8 列出了定向粒片板的品質確證之參考值。

備註：表 8 中的參考值是基於對具代表性的工業生產樣本的性質和統計下限值進行試驗而建立的，並符合 6.2.2.1 節和表 2 的結構性能要求。其他的板坯成型板類的參考值應按照 6.3.4.2 節的統計原則。

表 8 依 7.6 節小試體靜力抗彎試驗之乾燥條件小試體抗彎剛性和強度的品質確保最低參考值[a][c]

用途-跨度分級或性能類別	抗彎剛性($EI\times10^3$)				抗彎強度			
	應力施於平行強軸[b]		應力施於垂直強軸[b]		應力施於平行強軸[b]		應力施於垂直強軸[b]	
	N- mm²/mm	lbf- in.²/ft (寬)	N- mm²/mm	lbf- in.²/ft (寬)	N-mm/mm	lbf- in./ft (寬)	N-mm/mm	lbf- in./ft (寬)
護板								
屋頂-24	292	31	85	9	330	880	130	350
屋頂-24/底層地板-16	395	42	94	10	390	1040	140	370
屋頂-32/底層地板-16	490	52	113	12	460	1250	190	520
屋頂-40/底層地板-20	1240	132	358	38	810	2170	360	970
屋頂-48/底層地板-24	1790	190	763	81	920	2480	510	1380
結構 I								
3/8	292	31	85	9	330	880	130	350
7/16	395	42	141	15	390	1040	220	580
15/32	490	52	245	26	460	1250	320	860
1/2	490	52	273	29	460	1250	330	900
19/32&5/8	1240	132	471	50	810	2170	500	1360
23/32&3/4	1790	190	716	76	920	2480	650	1760
單層樓板								
單層樓板-16	876	93	198	21	650	1740	230	630
單層樓板-20	1110	118	264	28	710	1910	240	650
單層樓板-24	1600	170	546	58	910	2450	320	850
單層樓板-32	4170	443	1270	135	1570	4240	600	1610

單層樓板-48	8660	920	2110	224	2080	5600	820	2200

[a]試驗之準則不適用作設計性值。

[b]除有其他說明，板之強軸係指與表層及底層粒片或木薄片配置方向平行者。

[c]其他參考數值可依 6.2.2.1 節之程序透過可接受的性能建立。

6.3.3 物理性能

6.3.3.1 板厚度

成品板厚度應根據 7.12 節試驗程序對每 20 張板進行評估確定。參考值應當為平均值減去 1.932 標準差之值（根據 ASTM D2915，應為 75%的可信賴區間的 95%容許下限值）。

6.3.3.2 含水率

板材含水率應根據 7.11 節要求對 20 張板中每張板各取一個試片進行試驗。參考值應當是板材含水率中之最大值。參考值只有當根據 6.2.3 節進行尺寸安定性試驗有需要時才建立。

6.3.3.3 線性膨脹率

線性膨脹率的參考值基於根據 7.8 節的程序 A 或程序 B 的說明至少取自 20 張板試片。如果基於程序 A 的平均線性膨脹超過了 0.5%，參考值應根據 7.8.2.1 節的取自 20 張板試片的評估。參考值應取最高之觀測數值或是樣本平均值加上 1.8 倍的標準偏差值，在二者中的較高值。如果用程序 B，參考值應為 0.5%

對於不含定向粒片的複合板和板坯成型板，應當準備尺寸為 75×300 mm (3×12 in.)且僅進行垂直機器方向的試片進行試驗。

對於定向粒片板和板坯成型板，應當準備尺寸為 75×300 mm (3×12 in.)平行和垂直與板強軸方向的試片進行測試。

6.3.4 膠合性能

6.3.4.1 OSB 暴露 1 級定向粒片板的膠合性能

工廠規範中定向粒片板的參考值應是基於 7.16 節之反覆循環試驗後再根據 7.6 節對 20 個平行於強軸的樣本進行評估，或基於 6.3.4.2 節的程序，或依據表 7 中的資料值得到的。

6.3.4.2 暴露 1 級複合板和板坯成型板的膠合性能

對於暴露 1 級複合板和板坯成型板，至少 20 個樣本，每個樣本均分別取自 20 張板，應當使用 7.7 節所規定的試片根據 7.16 節（乾濕單循環試驗）的測試程序進行水分反覆循環。對於暴露 1 級的複合板和板坯成型板，至少 20 個樣本，每個樣本均分別取自 20 張板，應當使用 7.7 節所規定的試片根據 7.17 節（6 週循環試驗）的測試程序進行水分反覆循環。循環結束後，立即根據 7.13 節所規定的程序對複合板進行剝離評估。水分反覆循環之樣本應根據 7.13 節的程序進行試驗。每塊單板在認證時之參考值應當為最小破壞載重（5 個試片平均值）或樣本平均值減去 1.8 倍樣本標準偏差值二者中的較高值。另外，對於暴露 1 級板根據 7.16 節和 7.7 節進行試驗，在認證平均值上建立 90%的信賴區間下限值。

6.3.4.3 暴露 1 級合板的膠合性能

暴露 1 級合板的膠合性能參考值應根據 6.2.4.1.(b)節的規定。

6.3.4.4 含節和節孔的膠合性能

含節和節孔的膠合性能參考值應根據 6.2.4.2 節對節和節孔的規定並依 7.19 節進行試驗。

建議：當最大尺寸的節或節孔出現在常規膠合性能之樣本上時，應採用含節和節孔之膠和性能品質審核進行評估。有必要時，要根據 7.19 節對其進行試驗，且要符合 6.2.4.2 節的要求。

7 試驗方法

7.1 集中靜力載重與衝擊載重試驗

應當遵循 ASTM E-661 的要求以及本節所修訂的部分。跨度等級為 20 的試驗跨度應為 488 mm(19.2 英吋)。

乾燥試驗條件應在樣本送驗時含水率的±3%以內。濕潤測試條件應暴露在三天的連續單面潤濕，然後在濕潤時測試。濕潤/再乾燥條件應暴露在三天的連續單側潤濕/再乾燥，接著在如樣本送驗時含水率±3%以內的條件下進行測試。

7.1.1 試片準備

應遵循 ASTM E-661 中的試片製備要求，並且遵循 PS 2 中第 6.2.2.1 節所需試片數量要求。試片亦應根據要求進行水分含水率反覆循環處理。

7.1.2 試驗程序

集中靜力載重試驗：必須遵循 ASTM E-661 的步驟，除非構成測試框架是鋼製而非木材是用扣件模擬釘子者。在測量撓度時，載重速率為每 30 秒 445N (100 lbf)。在測量撓度之後, 如果使用手動泵液壓載重系統應當在 5 分鐘內達到降伏破壞。

集中衝擊載重試驗：必須遵循 ASTM E-661 方法 A 的步驟,除了以下兩種情況：

(a) 測試可以使用鋼框架來取代木框架，且使用扣件來模擬釘子。

(b) 對於跨度規定大於 24 的合板，衝擊載重量為 27 kg (60 pounds)。

跨度等級為 24 英吋以下之每一試片寬度至少為 610 mm(24 吋)，跨度等級 24 以上者，板寬度為 1220 毫米（48 英寸）。

7.2 均布載重試驗

7.2.1 總則

本方法涵蓋了決定結構用板在均布載重如雪載重、風載重和人活

載重情況下性能的程序。均布載重應採用在試片下方真空。此法可造成大氣壓力形成均布載重施加於測試試片。試片應安裝在真空室完全支撐框架上。

7.2.2 設備

真空室：真空室(圖 1 和圖 2) 必須由測試的板形成箱體頂部後構成一個密閉室。0.15 mm (6-mil) 的聚乙烯片或同等材料，在其周邊用膠帶安全封好，用來密封真空室的頂部。真空室必須牢固堅硬以抵抗載重作用下不致被破壞或過度變形。真空泵用於降低試片下方的氣壓。用絕對壓力計測量載重，並以電子資料讀出，然而也可使用壓力計或真空計測量載重。

托梁支承：框架構材必須有支撐以便抵抗載重作用下的撓度或旋轉。

撓度計：撓度計必須固定在剛性三腳架上，而且這些支腳應放置在托梁上。撓度精確度應到接近 0.025 mm (0.001 in.) 。

7.2.3 試片準備

樣本必須選取具有該測試產品的代表性。

長度：與框架構材垂直的試片長度必須等於中心到中心距離的兩倍。

寬度：試片寬度必須至少為 595 mm (23-1/2 in.)。

厚度：試片厚度必須在調濕後測量並記錄。

調濕：在測試之前，試片的條濕如表 3 中所述。

7.2.4 試驗程序

根據 7.2.3 節所述進行試片準備，準備測試的試片必須放在真空室的框架構材上，這些框架構材之間距依該等級安置並依建議的釘子大小和間距安裝。真空室的頂部必須用聚乙烯片密封,而且支撐撓度計的三角架必須放置於正確的位置上，使撓度計放置在能

讀出外側兩跨最大撓度的點上（圖 3 和圖 4）[1]。

[1] 雙跨距系統在均布載重下之最大撓度位置是在離外側托梁中心線 0.4215 S 位置，其中 S 為托梁中心至中心之間距。

圖 1 真空試驗室設備(圖示為以板強軸跨越支承)

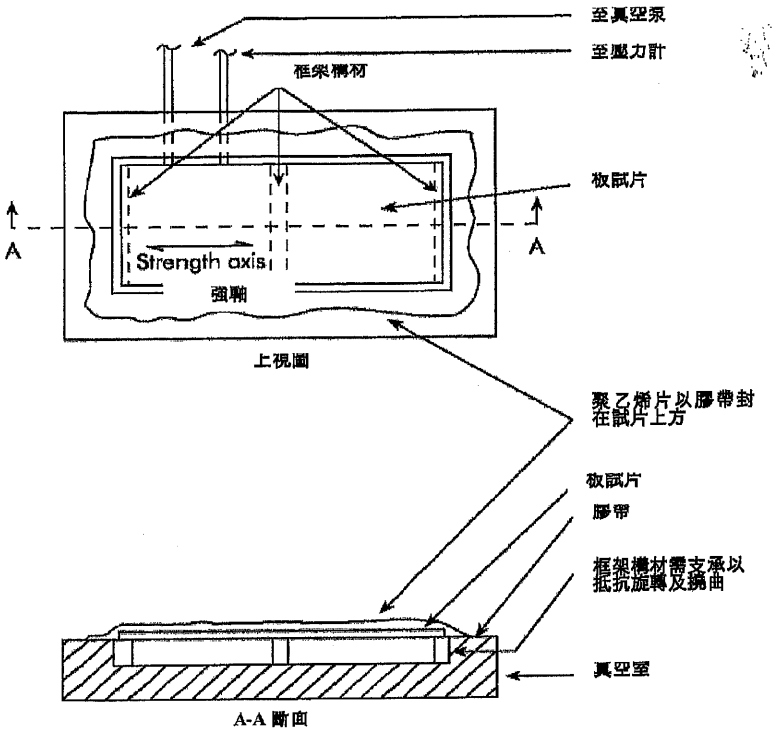

圖 2 真空試驗室設備(圖示為以板強軸平行支承)

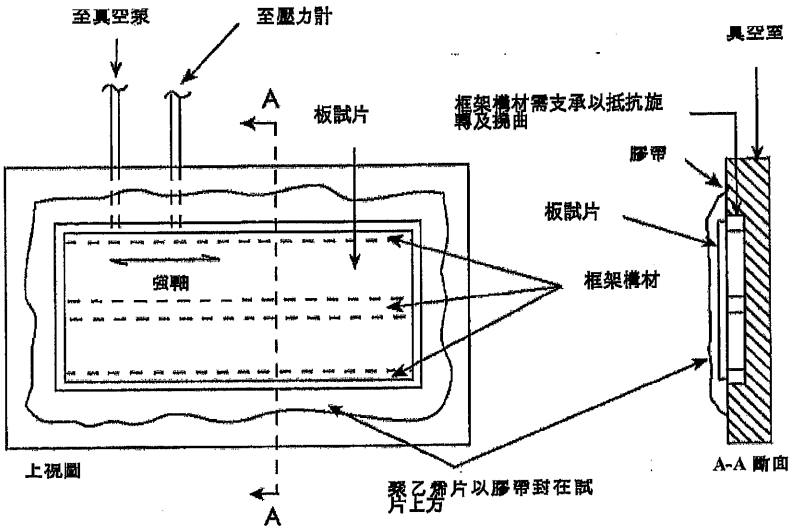

圖 3 均布載重試驗之試片(圖示為以板強軸跨越支承)

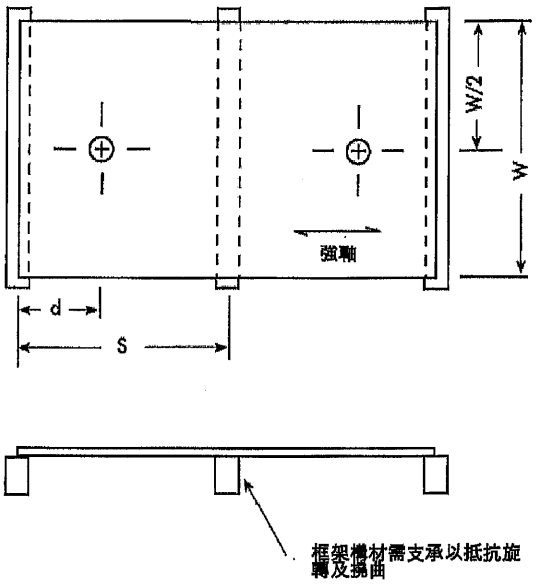

S=中心至中心之支承間距
d=0.4215 (S)兩跨距的位置
W=板寬度，最小值=595 mm (23.5 in.)
⊕=撓度量測位置

圖 4 均布載重試驗之試片(圖示為以板強軸平行支承)

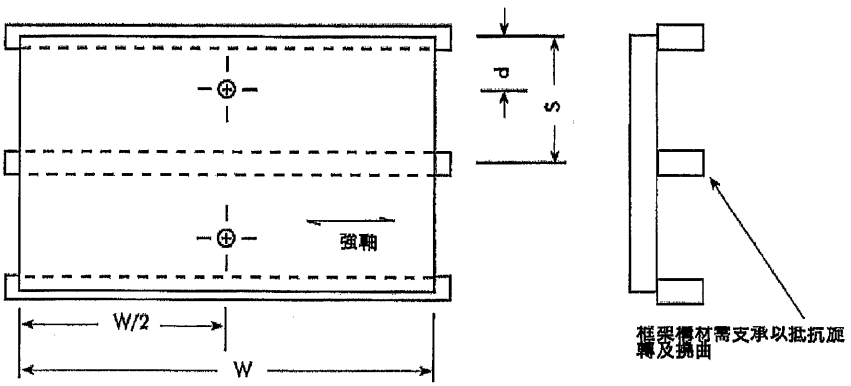

S=中心至中心之支承間距
d=0.4215 (S)兩跨距的位置
W=板寬度，最小值=595 mm (23.5 in.)
⊕=撓度量測位置

板必須以每分鐘 2.4 kPa (50 lbf/ft^2)的均一速率遞增載重，並且每增加 1.2 kPa (25 lbf/ft^2)時記錄撓度一次直至達到最大載重，或達到要求的驗證載重。只要有足夠數量的撓度資料用於形成載重-撓度曲線的直線部分。任何情況下撓度資料都不能少於六個。在已知載重下的撓度必須平移曲線斜率使其通過原點後決定，藉以修正固定系統的可能沉陷。

7.3 牆體試驗

7.3.1 總則

應遵循 ASTM E-72 中 14 節的牆體試驗原理。

7.3.2 試體準備

根據 ASTM E72 中所述準備測試試體，尺寸為 2.4 m×2.4 m (8×8 ft)，89×89 mm(規格 4×4 in.)角材在頂部框板上方以 100×150 mm (4×6 in.)鋼管補強防止過度變形。再增加一個垂直方向的撓度計並定位在牆體的右下角(如 ASTM E-72 中圖 7)記錄壓潰的底部框板。

間柱框架應當以花旗松或南方松的間柱等級，且含水率為 15%或以下。釘子尺寸和間距應如表 5 中所述。當使用 3.8×76 mm(0.148×3.0 in.)的釘子，應當用寬度為 64 mm(規格 3 in.)的框架於中間板接縫之位置以避免間柱劈裂。試體應在乾燥條件下試驗(見表 5 之附註 b)。

7.3.3 試驗程序

施加載重應該為持續均一的速率。載重速率應當選擇使一倍之試驗載重應不少於 2 分鐘。隨後的循環載重的載重速率應與該一倍試驗的載重循環相同。

撓度測量應該隨著牆體的載重進行記錄。在破壞之前紀錄至少 10 組相同一間隔的撓度讀數以建立載重-變形曲線破壞。在表 5 中指

定的一倍和二倍測試載重，該載重應該歸零並且讓牆體可以有 5 分鐘回復。在 2.5 倍的試驗載重下，撓度計或許會被移除而牆體會被一直加載直到被破壞。

總撓度量測值扣除牆體之上舉、基部滑動以及壓陷數值後的撓度並作紀錄，極限載重亦應紀錄。

7.4 釘著力試驗

7.4.1 總則

試驗時應量測板側向移動時釘子的單剪抵抗，本試驗程序所得之數值可與其他板產品數值進行比較，但本程序不應用作接合設計之資訊。還應測量豎直載重，垂直引拔載重亦應量測。

調濕-試驗前，試片應按照表 6 所描述的進行調濕。

7.4.2 試片準備

側向載重：每個試片的尺寸應為 150×150 mm (6×6 in.)。4 個釘子的試點應當標示在試片每邊，離邊 25mm (1in.)的中心軸線上。釘子尺寸應根據表 6 所示要求。

釘子應垂直釘入調濕後的板面。釘子釘入時應該使釘頭與板面平齊。用釘時，應有背襯以避免釘接面分離。所有釘子應當在釘入後立即進行測試。

垂直引拔載重：試片自側向引拔試片裁切時應有適當的尺寸 (至少 75×150 mm(3×6 in.))。釘子尺寸應根據需求使用。調濕之後，釘子應該垂直釘穿板且外露胴長最少 12 mm (1/2 in.)。

圖 5 量測結構用板類產品側向釘著容量的試驗及設備分解圖示

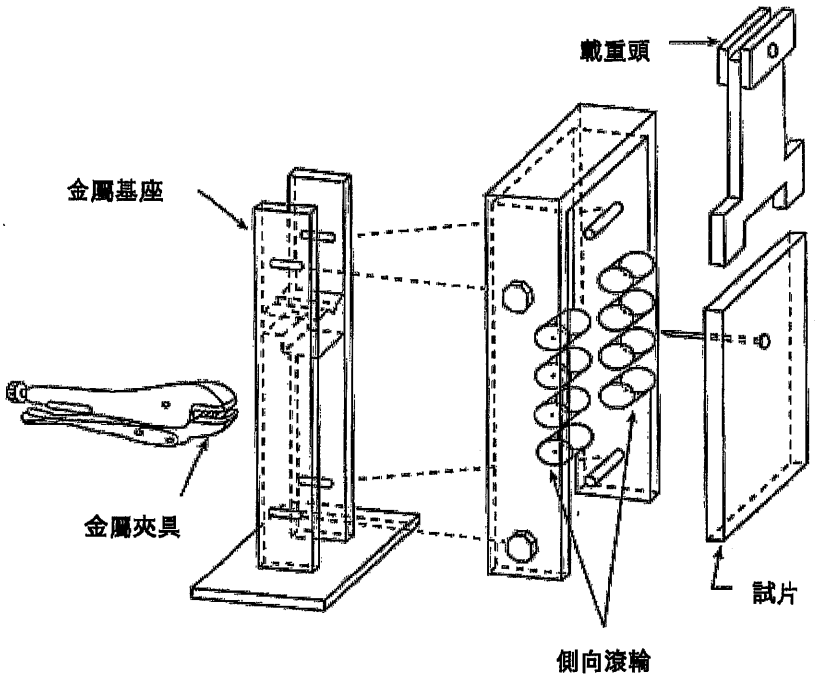

7.4.3 試驗程序

側向載重：以單剪方式施力於扣件。使用的設備相似於圖 5 所示。釘子胴身應當夾緊。由滾輪提供對板試片側向的限制以確保呈現垂直移動，使用軛型載重頭進行加載。載重頭如圖 5 所示。

在試驗全程中設備的移動載重頭在加載於試片時，應以連續且均一每分鐘 5 mm(0.2 in.)之速率進行。

垂直引拔載重：釘著力試驗室量測釘穿板厚度的釘子自垂直板面方向的引拔抵抗。

載重方法應該根據 ASTM D-1761 第 10 節所述。

在試驗全程中設備的移動載重頭在加載於試片時，應以連續且均一每分鐘 5 mm(0.2 in.)之速率進行。

7.5 大尺寸板的抗彎試驗

7.5.1 總則

此試驗程序決定了大尺寸板抗彎強度和剛性。應當遵循 ASTM

D-3043 方法 C 的一般規定。

7.5.2 試片準備

試片的大小與板材料的使用及板的組成有關。試片尺寸大小可能受限於設備的尺寸或者可用取樣材料的尺寸。除了板本身的不均勻性有影響外，試片尺寸並不影響測試結果。當非均勻材料包含密度變化、節、節孔、木理傾斜角或其他來自於一般建築和工業運用，測試試片寬度最小 610 mm (24 in.) 且建議在任何情況下寬度不應小於 300 mm (12 in.)。試片尺寸不小於 300×1220 mm (12×48 in.)。

7.5.3 試驗程序

試驗程序應該遵循 ASTM D-3043 中方法 C 所述，另外試片應測定沿強度軸及垂直強度軸方向之剛性，依要求亦應測定最大彎曲力矩。

7.6 OSB 小試片靜力抗彎試驗

7.6.1 總則

本試驗是建立用於品質保證目的所要建立的抗彎強度和剛性資訊。試驗方法應遵循 ASTM D-3043，方法 D 的原理。測試結果不得用於建立設計值之資料。

7.6.2 試片準備

除了寬度為 115 mm (4.5 in.) 的試片，其他都應根據 ASTM D-3043 的 8.2 節在每一樣本進行裁切。

7.6.3 試驗程序

應遵循 ASTM D-3043 的 8.1-8.6 節原則進行，試片則應裁切成下列長度：

性能類別小於等於 1/2，板的尺寸為 355 mm (14 in.)。

性能類別大於 1/2，小於 3/4，板的尺寸為 510 mm (20 in.)。

性能類別大於 3/4，板的尺寸為 610 mm (24 in.) 乘以性能類別值，再加上 50 mm (2 in.)。

7.7 複合板及板坯成型板的小尺寸（25 mm×125 mm(1 in.×5 in.)）靜力抗彎試驗

7.7.1 總則

此試驗目的是發展用於衡量膠合整體性的強度資料。試驗應採用對照組和水分循環的試片。

7.7.2 試件準備

15 個 25 mm×125 mm (1 in.×5 in.) 試片應從每片被測試的樣本裁切（如具有定向性的板每一方向應取 15 片）。對照組在單循環及六循環暴露條件的試片應並排配對裁切進行比較。含單板時試片之平行木理應順 125 mm(5 in.)方向裁切製備。板坯成型板之試片其 125 mm(6 in.)方向應順強軸方向裁切，除非需要表示板之方向性，則雙軸向各裁切 5 個試片。試片應在試驗前進行適當的調濕。

7.7.3 試驗程序

試片應視為一支梁，其淨跨距為 100 mm（4 in.），其載重頭及支點之直徑為 19.1 mm（3/4 in.）。加載應在跨距中央且其速度不超過 25mm/min 直到試片破壞。含單板複合板之試片，其板厚度作為梁的深度進行加載。板坯成型板的試片應該以裁切成 25 mm 作為梁的深度，且板厚度作為梁的寬度。紀錄試片的破壞載重應該精確到±4.4 N（±1 lbf）。應計算每塊板的平均破壞載重。如需表示板不同方向性質時，每個方向的試片分別進行平均值計算。各平均值應計入報告。

7.8 從乾燥或自窯乾或者相對濕度 50%到真空加壓浸漬的線性膨脹試驗

7.8.1 總則

試驗方法用作板尺寸安定性的評估。

7.8.2 試片準備

試片應裁切成至少 75 mm (3 in.)寬，至少 300 mm (12 in.) 長且應依板的兩個方向製備。

試片應避免大型特徵如節孔、節、或外層單板劈裂(如有單板)，特別是在沖孔的位置附近。其他屬於正常分等的特徵則應予納入。

每一試片中心線上作為量測點的固定參考點應位於離兩端 25 mm(1 in.)之位置。銅環放置在預鑽的孔洞應該是適當的參考點。使用參考測量點應允許線膨脹的測量可以獨立於任何暴露板邊緣額外的膨脹。

7.8.2.1 試驗程序

試片前置調濕

程序 A：試片應該在 103±2°C(217±4°F)乾燥設備中乾燥 24 小時或直到恒重。連續 24 小時之秤重其重量變化在 0.2%以內視為恆重。

程序 B：試片應該在相對濕度 50%±5%和 21°±6°C(70°±10°F)的環境中直到達到恆重，恆重為連續 24 小時之秤重其重量變化在 0.2%以內視為恆重。

真空加壓浸漬循環與量測：

在進行程序 A 或者程序 B 的前置調濕之後，將試片放置在一個平整用的夾具上且消任何平面外的扭曲，測點之間的測量使用一個帶有刻度盤的條形設備，其精度為 0.025 mm (0.001 in.)。

在試片經前處理之量測後，試片應放置在一個壓力缸中，其內裝有 18±6°C(65±10°F)自來水並進行 91±7 kPa(27±2 in.汞柱)的真空處理 1 小時(時間從完全真空開始)。試片應再進行 2 小時加壓

處理，壓力不超過 690 kPa (100 psi)。濕後，試片應當從壓力缸中取出並且重新測量其長度。

膨脹值計算應相比於前置調濕處理之後的尺寸 (絕乾或相對濕度的百分比)，公式如下：

程序 A (絕乾)

改變百分比$=\frac{L_w - L_d}{L_d}\times 100$

L_w =飽水尺寸

L_d=絕乾尺寸

程序 B (相對濕度)

改變百分比$=\frac{L_w - L_{50\%}}{L_{50\%}}\times 100$

L_w =飽水尺寸

$L_{50\%}$=在 50%相對濕度平衡的尺寸

7.9 單側濕潤處理後線性膨脹和厚度膨脹試驗

7.9.1 總則

本性能試驗的目的是測量線性膨脹和邊緣厚度膨脹。

7.9.2 試片準備

每片 1220×1220 mm (48×48 in.) 的試片應該只裁切單側板緣，其餘 3 個邊緣保留製造商生產時的原樣。在每個試片的軸中心線上且離各邊緣 25mm (1 in.) 位置預先鑽的孔放置 4 個銅環作為測量線性膨脹的點。這將會產生平行及垂直板強軸線的 1170 mm 距離。

此外，每一側毛邊的厚度膨漲評估的點應標明。其厚度測量應根據 7.12 節所述。

在來自相同批次的板進行測試前，其含水率(絕乾的基礎上)應根據 7.11 節所述進行測量。當試片的含水率超過 12%時，試片應置

於 20±3°C(68±6°F)及 68±5%相對濕度下達調濕至恆重以達到平衡含水率。乾燥後在 24 小時的連續兩次稱重其重差在 0.2%以內則達到恆重。

7.9.3 試驗程序

線性膨脹試片應該放置在一個整平用的夾具上以消除任何平面外的變形，且點之間的距離測量使用一個帶有刻度盤的條形設備，其精度為 0.025 mm（0.001 in.）。厚度應該沿著板邊緣使用精度為 0.025 mm（0.001 in.）為千分尺進行測量，在測量過程中使用棘輪稍壓。

基礎尺寸測量後，未處理的試片應作 30 度以內的傾角進行垂直安裝，一面以 18±6°C(65±10°F)的水中進行濕潤處理。濕潤處理應該持續 14 天。背面不應該被液態水濺濕，但會暴露在任何水氣下。除了剛裁切的一邊之外其他側邊應接觸到水。裁切的邊部應該作為作為上部邊緣且其邊部應該作封邊處理進行保護。在濕潤處理之後應再進行測量。

膨脹值的計算應表示成一個相較於原始尺寸的百分比，方程式如下：

$$改變百分比=\frac{L_w-L_{ar}}{L_{ar}}\times 100$$

L_w =飽水尺寸

L_{ar} =樣本收件時的尺寸(含水率小於 12%)

7.10 暴露於相對濕度下線性膨脹和厚度膨脹試驗量測

7.10.1 總則

量測線性膨脹的方法係根據 ASTM D-1037 第 108 至 111 節含水率之變化線性變異。如適用時亦可以根據 7.10.2 節和 7.10.3 節測量厚度膨脹。

7.10.2 試片準備

每一樣本應根據 ASTM D-1037 中 108 節至 111 節所述的進行裁切 2 片試片。試片應裁切成寬 75mm(3 in.),長 1040 mm (41 in.)。試片的最短長度不得小於 300 mm (12 in.) 長。測量線性膨脹的銅環應放置在每個試片的預先鑽孔的中心線上且孔的位置距離板兩端部 25 mm (1 in.)。亦即將會產生一個 990 mm (39 in.) 的標定距離。

此外，應該選擇並且標記在試片中心線距離板兩端部 75 mm (3 in.) 作為厚度膨脹的測量點。

7.10.3 試驗程序

根據 ASTM D-1037 中 108 節至 111 節所述測試線性膨脹。另外，線性膨脹試片應該放置在一個整平用的夾具上以消除任何平面外的變形，且點之間的測量使用一個帶有刻度盤的條形設備，其精度為 0.025mm (0.001 in.)。厚度應使用精度為 0.025 mm (0.001 in.) 為千分尺進行測量，在測量過程中使用棘輪稍壓。膨脹值的計算是相較於相對濕度為 50%的調濕條件下尺寸的百分比表示，公式如下：

改變百分比$=\frac{L_{90}-L_{50}}{L_{50}}\times 100$

L_{90} =在 90%的相對濕度下平衡的尺寸

L_{50} =在 50%相對濕度下平衡的尺寸

7.11 板含水率測定

7.11.1 總則

本程序定義的用乾燥器乾燥法決定板含水率的方法是依據 ASTM D-4442 中方法 B 的原理。

7.11.2 試片準備

對於每一張板，試片應離板緣至少 50 mm (2 in.)裁切。如果試片的尺寸小於 150×150 mm (6×6 in.)，則整片將可以作為試片進行

使用。

7.11.3 試驗程序

試片的重量應該進行記錄 (±0.2%) 並且將試片放入溫度為 103±2°C (217±4°F)的乾燥器中直至恒重。恒重的判斷依據為連續兩小時的稱重的重差在 0.2%以內。

含水率計算如下：

$$改變百分比 = M = \left[\frac{W_w - W_d}{W_d}\right] \times 100$$

M=含水率（百分比）

W_w=初始重量（g 或者其他相似單位）

W_d=絕乾後重量（g 或者其他相似單位）

7.12 板厚度測定

7.12.1 總則

本方法定義了決定板厚度的程序。

7.12.2 試片準備

量測時應記錄板的條件。

7.12.3 試驗程序

量測板厚度所使用的千分錶應帶有 19.1 mm (3/4 in.) (- 0, +1.3 mm [0.050 in.])直徑的平面測頭。測量時施于平面測頭壓力在 34 kPa (5 psi) 到 69 kPa (10 psi) 之間。量測的位置應在每一板緣大約中間位置且能代表該板的一般厚度且以四個量測的平均值作為該板的厚度。如果有一個測點含有一個該等級容許特點以致影響板厚度，則量測點應當從這一點移開。

7.13 探針剝離試驗

7.13.1 總則

本試驗程序定義決定複合板剝離的測試方法。

7.13.2 設備

所用探針的探頭應有 6.4 mm (1/4 in.) 寬，0.3 mm(0.012 in.) 厚，並且探頭的厚度可增加至約 0.64 mm (0.025in.)且有 12mm (1/2in.)長。寬度 6.4 mm 可自增加到離端部 25 mm(1 in.)的 16 mm (5/8in.)。探頭應具有各種方便長度。探針尖端應有倒角而不是尖銳的，以此保證在剝離量測時，通過剝離區域的纖維不會被切斷。

7.13.3 試片準備

自每張樣本裁切的 5 個試片應為 25×125 mm (1×5 in.) 尺寸且避開節、節孔和其他該等級容許的孔洞，以及板外層木理走向是沿長度方向。應該在任何強度測試之前應先進行剝離量測。

7.13.4 試驗程序

剝離應該根據以下程序進行評估。試片應以目視檢驗剝離。在試片週邊的單板與單板間或單板與木質材料間的膠合層任何分離應用探針確定剝離深度。當剝離深度為 6.4 mm (1/4 in.) 連續長度為 25 mm (1 in.) 應該視為未通過剝離試驗。當探針插入剝離的區域時施加輕微的壓力是必要的。施加的壓力大小應限制如使用大拇指和食指夾住探針之力道。在任何情況都不使用撬開的動作。

應記錄測試失敗的試片數量。

7.14 膠合劑抗黴試驗

7.14.1 設備

應採用箱櫃在產生黴菌的條件下放置試驗的試片，每個箱櫃應可區分為三個彼此相連且有可調整試片托盤的隔間，同時每個隔間前方都有一個密封的門。托盤的兩邊應用毛巾料垂直懸掛且較低的一端浸入水盤有如燈芯材料，以提供最大濕潤表面

積。這些盤子應放置在各隔間下方的箱櫃底板上。托盤中的水位應保持 65-75 mm (2-1/2 到 3 in.) 的深度。

為了保持黴菌箱櫃內溫度統一，箱櫃應放在可以出入的控制空間，該控制空間由溫控器控制一個 500 瓦的加熱器，使溫度保持在 27°C(80°F)，風扇驅動的空氣循環要能夠避免沉降，確保控制空間全區的溫度均一。黴菌箱櫃內不能有空氣循環，因為黴菌生長在靜止的空氣中。

箱櫃周圍的控制空間應保持同均一的溫度。

7.14.2 試片準備

用於決定板內膠合劑抗黴性能測試的試片的板取決於板材的構成方法。合板的剪斷試驗試片準備應根據 PS-1 製作，鋸槽之切口至可以刀裂受拉而封閉以決定其最大破壞載重。

複合板和板坯成型板的試片尺寸為 25×125 mm (1×5 in.)。複合板試片單板木理方向應沿 125 mm (5 in.)方向。板坯成型板板軸強應平行 125 mm (5 in.)進行裁切，另外如果板含有定向配置之木料，則應該準備 2 組完整的試片，即一組為平行於板強軸和一組垂直於板強軸的試片。

要進行抗黴試驗的 4 張板應切成 100 對試片(原料有定向配置時，每一條件各一組 100 對試片)。配對的試片(抗黴試驗試片和對照試片)應當完全隨機，每個配置方向分成 10 組，每組 20 個試片(10 測試試片和 10 個對照試片)。每組的對照試片和測試試片應分開。

7.14.3 試驗程序

在將合板試片放入黴菌箱櫃前，合板試片和對照試片應先貼上標籤，在室溫的條件下浸在自來水 5 秒，然後在 95%(±2%)相對濕度和溫度 27°C(80°F)的的恆溫恆濕箱內分別調濕一週。一週

後移出測試試片和對照試片。測試試片應撒滿大豆粉之後平放在黴菌箱櫃內的生材狀態松木邊材單板木片。單板木片和測試試片堆疊後放置在黴菌箱櫃內。對照試片應允許在室溫條件下乾燥。

每隔兩週黴菌試驗應從箱櫃中取出，在室溫下放置一週。測試試片和對照試片應依要求進行測試。10 組試片應足夠測試合板產品的抗黴性能。

複合板試片和板坯成型產品的抗黴試驗試片應進行 5 秒的自來水浸漬且在相對濕度 95% (±2%)，溫度為 27°C (80°F)的分開恆溫恆濕箱櫃中暴露一週。

複合板和板坯成型產品的對照試驗試片應根據 16 節所述進行測試。每隔兩週抗黴試驗和水分循環對照試片應於室溫環境下乾燥一週，而後根據第 7.7 節進行測試。

7.15 膠合劑抗菌試驗

7.15.1 總則

本方法是為確定膠合劑在加速細菌生長的條件下，是否對細菌攻擊有足夠的抵抗力並能保持膠合的完整性。

7.15.2 試片準備

試片的尺寸應取決於板的製作構成。合板應根據 PS-1 中剪斷試片的尺寸進行製作，鋸槽之切口至可以使刀裂受拉耐封閉以決定其最大破壞載重。其他板的試片尺寸為 25×125 mm (1×5 in.)。含單板的板材應該沿木理方向裁切 125 mm (5 in.) 之長度。單板應該完全沒有節、節孔和其他該等級容許的缺陷。

板坯成型板的試片應沿板強軸方向進行裁切，如板含定向配置原料，則應取 2 組完整的試片即平行於強軸方向和垂直於強軸方向的試片。

準備足夠的材料以提供 80 組試件。每組試件應該進行編號從 1 到 80 依次取樣，奇數號的試件進行細菌接觸而偶數號的試件應該進行控制避免接觸細菌。10 個奇數號試件和與之匹配的 10 個偶數號試件應組成一個暴露組和一個控制組。4 組即 80 個試件應該從每個方向進行測試。

7.15.3 試驗程序

包括對照組的合板試片，應該根據 PS-1 中室外合板真空加壓試驗在自來水中進行 0.5 小時的真空和 0.5 小時的加壓浸漬循環處理。對照組試片應在所需的濕潤條件進行測試。應記錄破壞載重且應決定每組暴露組條件的對照組平均值。

對於複合板和板坯成型產品，所有試片都應根據第 7.16 節所述的水分循環試驗的真空浸漬處理部分進行。對照組試片應根據第 7.16 節中所述的要求進行乾燥，並且根據第 7.7 節所述的程序進行破壞後乾燥，記錄破壞載重決定每組暴露條件的對照組組平均值。

所有要進行細菌暴露處理的試片應平整的浮置在由大豆粉、水和赤楊鋸屑混合而成的濃漿上，濃漿組成為大豆粉 7%、水 83%、赤楊鋸屑 10%（鋸屑含水率為 18%）。這種濃漿應添加重量的 0.3%的氫氧化鈉 50%濃度溶液。濃漿倒入托盤至深度為 25 mm (1 in.)（不要使用銅托盤）。這些放入了試片的濃漿托盤置於第 7.14 節所述的箱櫃中進行試驗。

在 12 個星期的試驗下每隔 3 個星期應從箱櫃中取出一個暴露組進行測試。合板試片應該在濕潤條件下根據合板標準剪斷試驗的方法進行測試。複合材料試片和板坯成型板試片根據 7.16 節所述的乾燥循環進行乾燥，並根據 7.16 節所述進行破壞。

7.16 膠合性能的水分循環試驗（單循環試驗）

7.16.1 總則

水分循環試驗是一項加速膠合降解的品質管制方法，一般是在水份循環之後進行強度試驗。

7.16.2 試片準備

試片尺寸和配置應視試驗而定進行水分循環。

7.16.3 試驗程序

試件應該放置在保持水和空氣自由流動的架子上。試件應該放置在一個裝滿 66°C (150°F)的水，50.6 kPa (15 in. 汞柱)的真空壓力桶中保持 30min。之後取消真空環境將試片置於大氣壓力環境的水中保持 30 min。再將壓力槽中的水排除，將試片放置在 82°C (180°F)的乾燥器中 15 小時，乾燥器每分鐘進行 45-50 次的空氣風扇強制循環。然後根據適當的方法在乾燥條件下試驗。

7.17 水分循環下剝離和強度保留試驗

7.17.1 總則

本水分循環是用於暴露 1 級產品的剝離和強度保留。

7.17.1 試片準備

試片尺寸和配置應視試驗而定進行水分循環。

7.17.2 試驗程序

試件應該放置在保持水和空氣自由流動的架子上。試件應該放置在一個裝滿 66°C (150°F)的水，50.6 kPa (15 in. 汞柱)的真空壓力桶中保持 30min。之後取消真空環境將試片置於大氣壓力環境的水中保持 30 min。再將壓力槽中的水排除，將試片放置在 82°C (180°F)的乾燥器中 15 小時，乾燥器每分鐘進行 45-50 次的空氣風扇強制循環。試片應再放入壓力槽並且進行抽真空浸漬重複的處理。在第二次抽真空浸漬循環之後，試片應再放入乾燥器中乾燥 15 小時。以完成兩個循環。測試應再繼續進行兩天

直到 6 個循環全部完成。試片應在乾燥的條件下根據適當的方法進行測試。

7.18 含節和節孔合板之膠合性能試驗

7.18.1 總則

本水分循環和載重程序是用於驗證在集中靜載重和衝擊載重下施力於最大節或節孔位置板的撓曲和破壞抵抗。本方法用於評估節和節孔橫向木理的寬度大於 51 mm (2 in.) 但小於 76 mm (3 in.) 的暴露 1 級合板。

7.18.2 試片準備

從 10 張 1220×2440 mm (48×96 in.)板中裁取試片，每個試片至少裁切成 595 mm (23.5 in.)寬，長為跨度的兩倍。試片應該有節或節孔在測試跨度中央線上且離板兩端部至少 295 mm (11-5/8 in.)。節的最大尺寸應為該等級所容許的最大尺寸(+0, −12 mm [+0, −1/2 in.])。

每一試片應垂直放置在一個連續 72 小時噴灑水的水槽中。另一種替代噴灑之方法，連續浸漬在水位不超過板上方 600 mm (24 in.) 72 小時。板應該在溫度為 20±3°C (68±6°F)相對濕度為 65±3%的環境中進行再乾燥直至恆重。

7.18.3 試驗程序

集中靜載重：除下述兩點之外，必須遵循 ASTM E-661 和 PS 2 的第 7.1 節所述的的程序

1. 當施加彎曲載重時，放在試驗機台上的試片應使節或節孔位於拉伸側。
2. 載重應施加在含節或節孔側的背面且位於節或節孔的正上方。

集中衝擊載重：除下述三點之外，必須遵循 ASTM E-661 和 PS

2 的第 7.1 節所述的的程序

1. 試片放置在機台上時應使節或節孔受拉伸。
2. 衝擊袋應一次就從 760 mm (30 in.)高度落下。
3. 衝擊袋應落在節或節孔側的背面且落在該節或節孔之上方位置

7.19 徑向探針試驗

7.19.1 總則

本方法定義決定合板與節及節孔有關的剝離之程序。

7.19.2 設備

探針之前端應有 6.4 mm (1/4 in.)寬及 0.3 mm (0.012 in.)厚，且自前端起至 12 mm (1/2 in.)位置的厚度可增加到 0.6 mm (0.025 in.)，另外自前端起至 25 mm (1 in.) 位置的寬度可增加至 16 mm (5/8 in.)。探針的長度則無限制，探針的前端應作倒角，不宜尖銳，才不致於在探測剝離時將剝離區域橫跨的纖維切斷。另外，探針應具備一項機制能夠限制最大的出力。

7.19.3 試片準備

每一樣板應選擇一個節或節孔。所選的節或節孔最大尺寸應為該等級容許的最大尺寸(+0, –13 mm [+0, –1/2 in.])。每個試片被切割成 300×300 mm (12×12 in.)且節或節孔位置大約在中央部位。

試片應根據下述三種循環之一進行水分循環和再乾燥：

1. 依 7.18 節所述進行 72 小時的灑水循環。在取出之後試片應在溫度 20±3°C (68±6°F)相對濕度 65±3%的環境中進行乾燥直至恆重。
2. 依 7.18 節所述進行 72 小時的浸水循環(用於代替 72 小時的灑水程序)。在取出之後，試片應在溫度 20±3°C (68±6°F)相

對濕度 65±3%的環境中進行乾燥直至恆重（重量在 2 小時內變化小於 0.2%）。

3. 試片放置在壓力槽的 49±6°C (120 ±10°F)水中並且抽真空 91±7 kPa (27±2 in. 汞柱) 3 小時。之後試片應加壓 3 小時壓力不超過 414 kPa (60 psi)。緊隨其後進行二次真空處理 91±7 kPa (27±2 in. 汞柱)2 小時。解壓後，試片置於溫度 20±3°C (68±6°F)相對濕度 65±3%的環境中進行乾燥直至恆重，恆重即 2 小時內重量變化小於 0.2%。

7.19.4 試驗程序

每個試片在節或節孔的中心位置裁切成 8 個半徑交互的扇形區域。在節或節孔的周邊區域應進行目視檢測剝離。在剝離處探針應用 35.5±4.5 N (8±1 lbf)的力插入域。探針不能有橫向剝離動作。

對於每個扇形區域，從扇形尖端到超過節或節孔的剝離邊界的徑向距離應沿扇形兩側邊緣進行測量並且記錄。在沒有剝離的區域，從扇形尖端到節或節孔的邊界的徑向距離應沿扇形邊緣進行測量並且記錄。

對於每個試片剝離的總面積應該計算如下：

$A=\pi R^2$

A=剝離區域總面積（mm^2或者 $in.^2$）

R = 剝離半徑平均值，計算從扇形尖端到節或節孔的邊界或剝離的邊界的 16 個距離的平均值（mm 或 in.）

7.20 自重的剛性容量(EI)試驗

7.20.1 總則

本程序提供全尺寸板剛性容量的估算，自重剛性不是必要的項目評價整張板的剛度性能。

7.20.2 設備

鋸木架可用於支撐，但建議使用金屬框架如圖 6 支撐應至少 1220 毫米寬，固定在地板或重物上，水平放置並且相互平行。位移計的測量範圍應為 0 到 50 mm (0 到 2 in.)，具有量測 0.025 mm (0.001 in.) 的增量。加載器應長 1220 mm (48 in.) 寬為 25 到 38 mm (1 到 1.5 in.)。加載重量為量測讀數 0.5N (0.1 lb)。加載器通常為 44.5, 89.0 和 178.0N (10, 20 和 40 lb)。

圖 6 自重剛性試驗的鋼製試驗框架

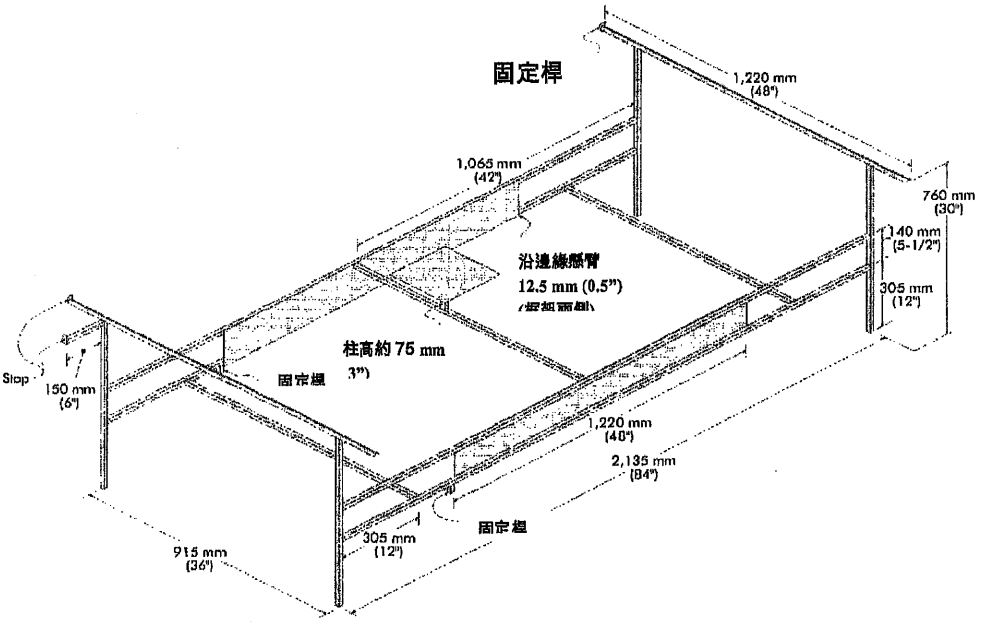

7.20.3 試片準備

試片的數量由認證機構來確定。在量測平行於板強度軸的剛度時，應使用 1,220×2,440 mm (48×96 in.)的板進行量測。量測垂直於強度軸的剛度時允許其他的長度。在板寬 1220 mm 方向於背板離端部 150 mm 各標示一條線，並且在面板的中心部位標示一條線如圖 7 所示，這可能是有用的。同時在板背面中心處也

標示一個 X 記號。

圖 7 板面配置的記號

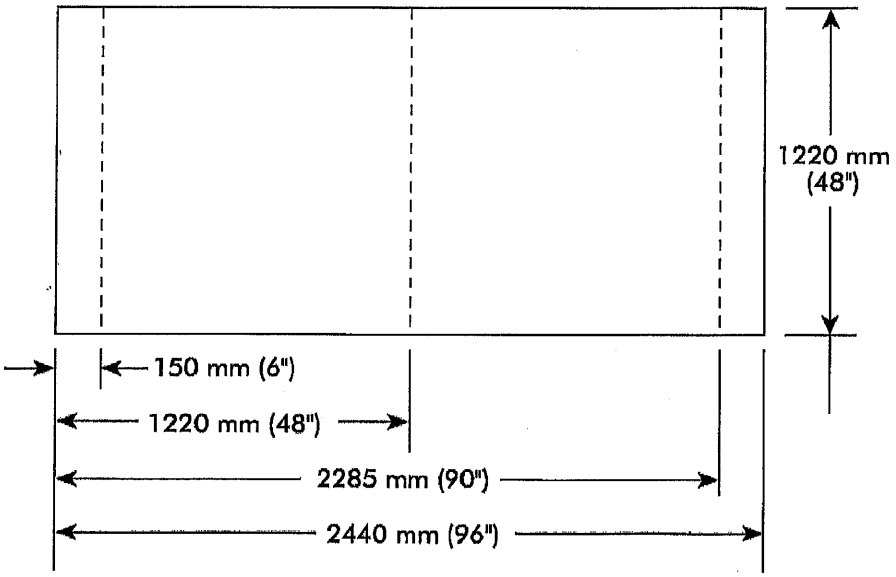

在板背面中心處作"X"記號

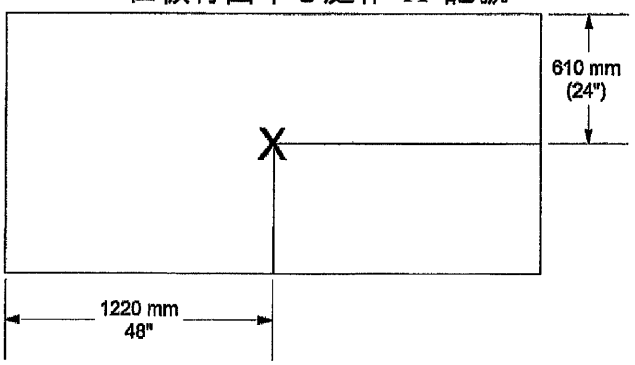

7.20.4 試驗程序

測試 2,440 mm (96 in.) 長軸方向的常用跨度為 2,135 mm (84 in.)，而 1,220 mm (48 in.) 軸向的常用跨度為 915 mm (36 in.)。把板置於支點之上保持平整且板端部平行於支點並使板的每側懸臂長度一致。板上的劃線可用于對齊。根據製造商使用的建議使板的板面朝上。位移計應放置於板下方並固定在可調整的

夾具上，位移計應垂直於板面並指向標示 X 的位置（見 7.20.3 節）。

加載器置於跨距中央，且平行於支點。首先對板進行預加載以壓平板並消除可能的變形，且使板與支點可以完全接觸。勿使用過度扭曲的板。對於性能類別為 3/8 和 7/16 板，預加載為 44.5N（10 lb）而對於大於 15/32 的板預加載為 89.0N（20 lb）。

撓度記錄值的精度為 0.025 mm（0.001 in.）。為了獲得準確的剛性容量，對於性能分類 3/4 以下的板在預加載和最終加載變形量的差值在 6.4 mm 到 8.9 mm（0.25 到 0.35 in.）之間。為了使得大於 3/4 的板應有足夠的重量達到 5 mm（0.2 in.）的撓度，則可裁切板寬度至 610 mm（24 in.）以達到撓度的要求。

表 9 常用預加載及試驗載重

性能分類	預加載		試驗載重		試驗跨度			
					平行強度軸		垂直強度軸	
	N	lb	N	lb	mm	In.	mm	In.
3/8, 7/16	44.5	10	44.5	10	2135	84	915	36
15/32-5/8	89.0	20	89.0	20	2135	84	915	36
23/32-7/8	89.0	20	178.0	20	2135	84	915	36
大於 7/8	89.0	20	*	*	2135	84	915	36

*如果撓度低於建議值而且沒有更高的重量可以加載，則板可以適當減小板寬(例如自 1220 mm (48 in.)減少至 610 mm (24 in.))

在預加載之後和最終加載要立即讀取撓度值，宜需 2 個人進行操作。在施以預加載之後立即讀取位移計讀數。在讀取預加載

撓度讀數之後即進行繼續加載。在最終的加載之後立即讀取第二次撓度值並記錄。

自重條件的剛性計算公式如下：

$$EI = \frac{(P_2 - P_1) \times \lambda^3}{K \times b \times (D_2 - D_1)}$$

EI= 板剛性，N-mm^2/mm(lbf-in.^{2}/ft)

P_1 =預加載，N (lbf)

P_2 =總載重，N (lbf)

λ=跨度，mm (in.)

b=寬度，mm (in.)

D_1 =預加載後的撓度值，mm (in.)

D_2 =最終載重下撓度值，mm (in.)

K= 常數（當量測 b 的單位為 mm 時取 48，當量測單位為 in. 時取 4）

8 商標和認證

8.1 認證

符合規範的板材應印有包含合格檢視以及測試機構的章戳，用於檢視製造（有關品質之適當的取樣數量，測試和檢驗）或是試驗經隨機抽樣可出廠的成品符合規範已認證。

8.2 認證檢驗與測試機構

合格的檢驗以及試驗機構應具備以下要求：

(a) 有專業的技術人員及設備，經由檢視、取樣及試驗以確認產品的分級、測量、樹種、施工、砂光、膠合、工藝技術以及其他產品特性，能夠符合所規定的適用要求。

(b) 有完整程序讓測試人員能夠進行檢視及試驗之運作。

(c) 對產品進行檢查或測試的任何公司沒有財務利益，沒有財務依賴。

(d)不屬於任何公司且不被操控。

8.3 板的標識

所有護板-結構 I 級護板、單一樓板等符合規範的板材都應有符合標準的包含等級的章戳，並有合格的檢測機構的章戳作為識別。如果以此章戳作為識別，在板上章戳所顯示的合格檢測機構可以提供該產品的規格。章戳上應包含板材等級，跨度，膠合性能以及符合規範 PS2-10 的標準。每個板製造商的任何附加應用規範都應清楚地標示在章戳上。木材原料有定向配置的板坯成型板應明示強度軸方向。板性能類別(參見 5.2.1.2 節)和術語"性能類別"或縮寫(即 PERF CAT, CAT or Category)應標記在板上。另外，性能種類中的板厚度容許差為千分之一吋應標示在板面(參見 5.2.1.2 節)。

8.3.1 無效標識

板面原貼有符合標準的章戳但後來又不符合的，製造商應將其註記為不符合規範或塗銷：

格外品的板材上應有最小尺寸為 100×125 mm (4×5 in.)以上的明顯章戳，顯示格外品，所有其外機構的章戳無效等字樣。(參見格外品的定義)。不符合本標準所有適用的條文的格外品，不得引用本標準為認證或作為板之章戳。

9 有效期及鑒定

本標準經 PS2 常委會修訂、核准，並在 2010 年 9 月 1 日公告徵求意見。完成公共審查後，該標準於 2011 年 6 月 1 日生效。在有效期內，允許在合同、代碼、廣告、發票、產品標籤等等參照此標準。但是，不得以廣告或其他任何形式說明該產品經美國國家標準與技術研究院和/或美國商務部批准或認可。以下木質結構用板性能標準建議的說明允許可以代表該產品符合本標準的要求: 按照美國商務部有關的自願性產品標準程序(該如板或該批符合 PS2 所要求)，(製造廠和

或經銷商名稱及地址)對本產品符合標準負所有責任。(製造廠和或經銷商名稱及地址)符合自願性產品標準 PS2。

10 常務委員會

常務委員會被指定要協助維護當前標準。委員會成員可以從委員會秘書處得到：標準服務部門，國際標準與技術研究所，100 Bureau Drive，MS 2150，Gaithersburg，Maryland 20899-2150, website: ts.nist.gov/sccg.

有關標準解釋或執行問題以及第三方品質保證政策和程序應當由標準常務委員會指定的標準實施審查小組委員會負責。需考慮的問題應以書面形式記錄交給常務委員會秘書處，並由其支付標準委員會處理。經由小組的正式運作程序後由 NIST 批准。小組委員會的任何建議都會報向常務委員會進行考慮和採取行動。

附錄 A. (非強制性)
再檢視實務

A1 出貨實務

A1.1 總則

此資訊是根據行業慣例和提供給結構用板購買者的。

A1.2 要求再檢視

買方應向賣方直接提出任何認證符合標準的貨品或大量板材。買方和賣方在解決購買、出售或裝運符合標準的板的投訴而缺乏協議時，應當提交這些板給該板所認證的測試機構進行複檢。

A1.3 買方責任

可以對賣方要求以下複檢：

a. 板材等級：從工廠發貨到達第一個收貨地點的 30 天內，如對板材等級與發票之間有任何問題的。

b. 室外用板的膠合劑品質：當目視有明顯的剝離。

c. 暴露 1 級板節和節孔處的膠合品質和膠合性能：從工廠發貨到達第一個收貨地點的 6 個月內，目視有明顯的剝離。

d. 結構性能，例如板材集中載重的抵抗：從工廠發貨到達第一個收貨地點的 6 個月內。

e. 對物理性質，例如板材線性膨脹：從工廠發貨到達第一個收貨地點的 6 個月內。

所有在等級有爭議的板應保持完好無損，並妥善保護免受破壞、劣化以及避免直接接觸可能會影響到公平性複檢的水分暴露。

所有品質有爭議的板應當在提出申請複檢要求後保留不超過 30 天。在這 30 天內買方使用任何或是所有的有爭議存貨，均視為已接受的板類。

A1.4 賣方責任

賣方收到複檢要求後應立即覆函。

A1.5 成本與協助

如果有爭議的該物品或該批貨品未能通過 A1.6 節所述的複驗要求，則複驗成本由賣方承擔。如果板通過複驗要求，則費用應由買方承擔。買方應提供合理的協助以加速複驗。

A1.6 複檢程序與和解

A1.6.1 板材條件

所有符合本標準的板應當如製成品的條件下接受複檢。此要求並不適用於膠合品質的複檢。

A1.6.2 抽樣板的等級，尺寸和厚度複檢

可由買家或賣家選擇在板等級、尺寸、和厚度等項目本應是符合本標準的板而有爭議時，可就該項目有爭議的全部板進行複檢。但是，買家和賣家可能同意採取減量抽樣基礎，選取至少 20%或 300 張板，視其中何者小，且又能代表有問題的有爭議的板進行複檢。在減量抽樣時，從每個有爭議項中選擇的板應當按比例分配。不符合等級要求或超出尺寸和厚度偏差容許值規定的板應貼有不符合商標，並且應由合格的檢驗機構重新進行複檢貼上新的規格及該機構的特別檢驗標誌，並由該機構的授權實施。

A1.6.3 板材等級、尺寸和厚度複檢

如果有爭議的項目進行複檢有超過 5%不合格或者超出尺寸容許偏差的產品，則該項目未能通過複檢，那麼這些不合格板將不被接受。如果有爭議的項目小於 5%或只有少部分不合格或超出尺寸容許偏差的，則可通過複檢，並應通過買家和賣家之間的協議處置不合格板。另外在超過 5%以上的等級和尺寸容許偏

差的複驗結果，在內層單板間隙限制項目應分別考量 5%的偏差，此包括對填補中板及拼接中板的限制。

A1.6.4 樣本的膠合品質、節與節孔的膠合性能、結構性能或物理性能複檢

從同批次或訂單的有爭議的板材中取出 20 塊或 5%（以少的數量為準）的板材進行試驗。板的取樣數量根據該批產品數量乘以百分比並四捨五入計算出。取樣時應盡可能涵蓋所有材料範圍。當該批次或訂單包含不同膠合類型時，應針對每種類型進行測試和評估。

A1.6.5 膠合品質複檢

有爭議批次或訂單的未使用板應遵循上述第 7 和 A1.6.4 章節所定的程序進行。如果複檢試驗項中膠合品質未能滿足 6.2.4 的應要求，該批次或訂單為未能通過複檢，該批次板將可能會被買方拒絕。如果膠合品質滿足要求，該批次或訂單為也通過複檢，買方應接受該批次板，但買家不需接受任何有剝離的室外用板。

A1.6.6 節疤與節孔的膠合性能複檢

買方和賣方之間除非另有約定，含節和節孔的膠合性能複檢應當限制該節和節孔橫跨木理方向的測量寬度為大於 50 mm (2 in.) 及小於 76 mm (3 in.)。節和節孔應根據 7.18 和 7.19 節規定的循環進行複檢。如果板材在複檢取樣前未暴露於天候條件下，樣板應在複檢前根據 7.18 和 7.19 節規定的循環進行水分調濕。

如果複檢的膠合性能不符合要求，該批次或訂單未能通過檢驗，則買家可能會拒絕該批次板材。如果符合複檢要求，該批次或訂單通過複檢檢驗，不合格板材應透過買家和賣家之間的協議處置。

A1.6.7 結構性能複檢

買方和賣方之間除非另有約定，結構性能複檢僅限於集中載重（5.3.1.1 節）。如果買方和賣方同意附加試驗，可能需要比 A1.6.4 節所要求的更多的板。如果複檢不符合集中載重要求，該批次或訂單未能通過複檢檢驗，買方可能會拒絕該批次板。如果集中載重滿足要求，該批次或訂單通過複檢檢驗，不合格板材應透過買方和賣方之間的協議處置。

A1.6.8 物理性質複檢

買方和賣方之間除非另有約定，物理性質複檢僅限於線性膨脹（5.3.2.1 節）。如果複檢不符合線性膨脹要求，該批次或訂單未能通過複檢檢驗，買方可能會拒絕該批次板。如果線性膨脹滿足要求，該批次或訂單通過了檢檢驗，不合格板材應透過買方和賣方之間的協議處置。

複檢流程圖

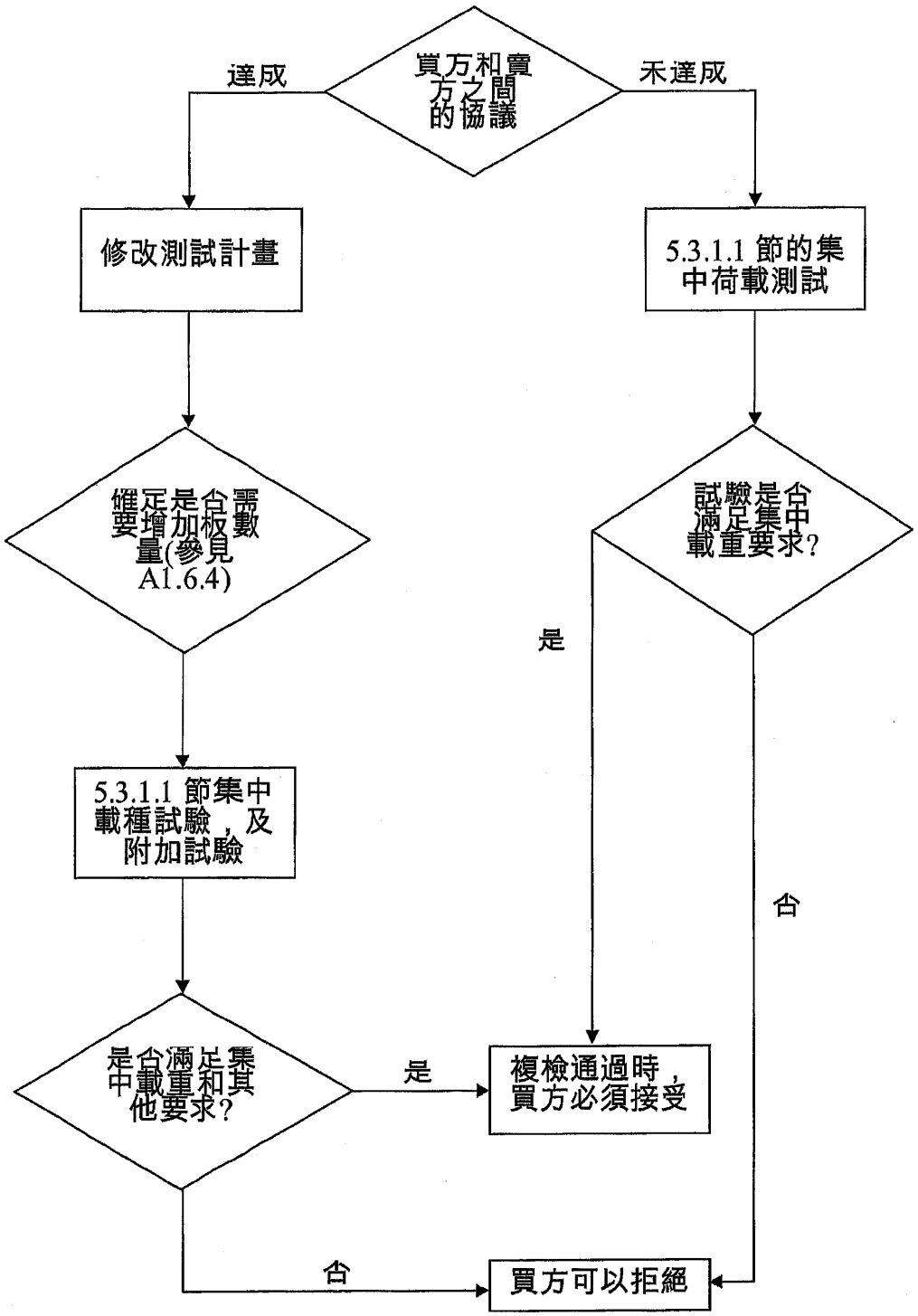
買方和賣方之間的協議
達成
未達成
修改測試計畫
5.3.1.1 節的集中荷載測試
確定是否需要增加板數量(參見A1.6.4)
試驗是否滿足集中載重要求?
是
否
5.3.1.1 節集中載種試驗，及附加試驗
是否滿足集中載重和其他要求?
是
複檢通過時，買方必須接受
否
買方可以拒絕

附錄 B (非強制性)

認證流程圖

屋頂、底層地板、單一地板用途之性能分級板類認證

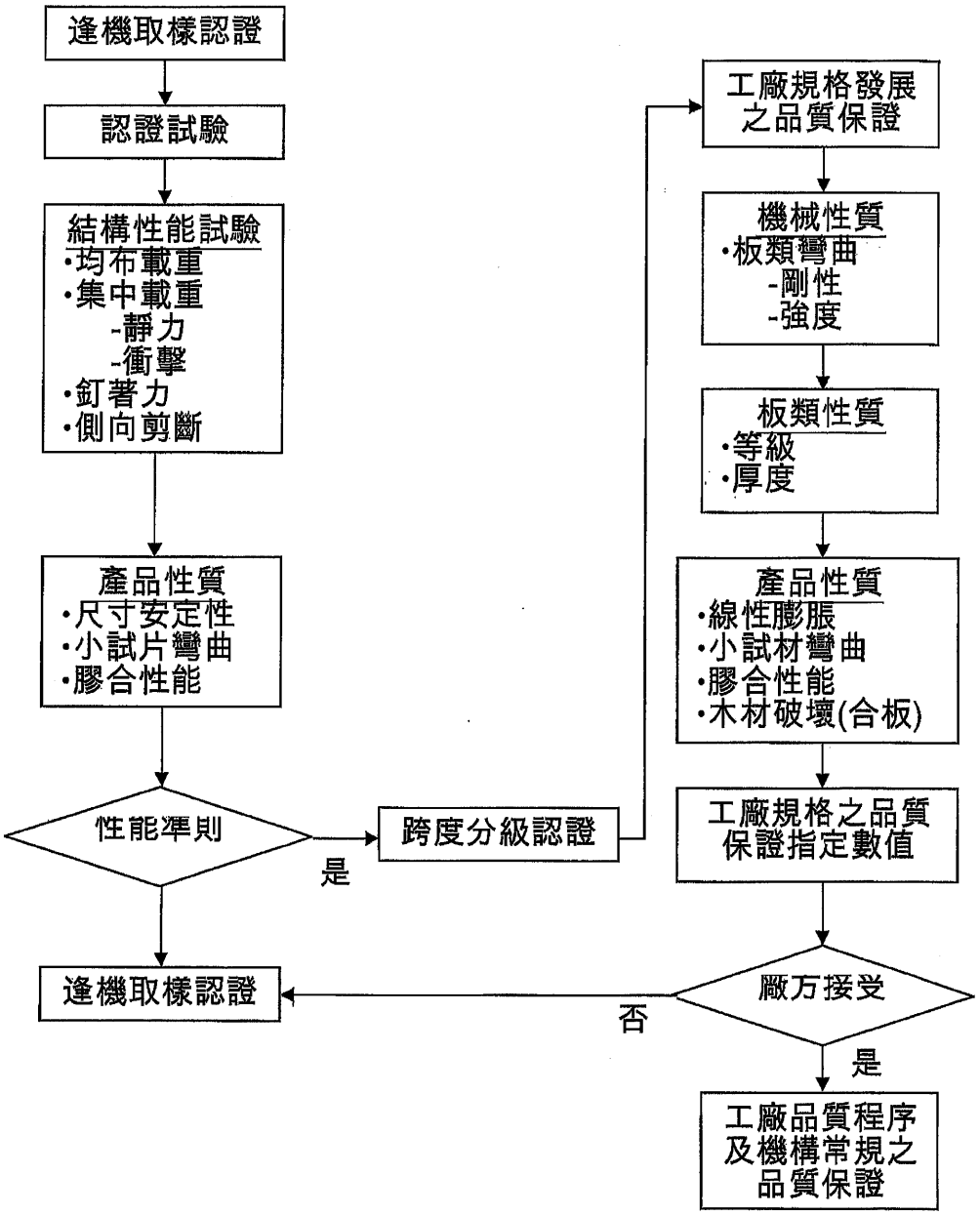

附錄 C (非強制性)

厚度標示建議

C1 厚度標示建議

5.2.1.2 節訂定板厚度容許差和板性能類別。8.3 節訂定板厚度標示應精確到 1/1000 英寸，並且其厚度值應當在性能類別中對應的最大和最小厚度範圍內。表 C1 顯示了建議厚度標示。

C2 標籤規定

參見附錄 D 對標籤處理的規定。

表 C1 板類厚度標示之建議

性能類別 [2]	板類厚度標示之要求 [1]		
	最小厚度 in. (mm)	最大厚度 in. (mm)	厚度標示建議 [3]
1/4 性能類別	0.219 (5.56)	0.281 (7.14)	厚度 0.225 IN.
5/16 性能類別	0.281 (7.14)	0.344 (8.73)	厚度 0.289 IN.
11/32 性能類別	0.313 (7.94)	0.375 (9.53)	厚度 0.322 IN.
3/8 性能類別	0.344 (8.73)	0.406 (10.32)	厚度 0.354 IN.
7/16 性能類別	0.406 (10.32)	0.469 (11.91)	厚度 0.418 IN.
15/32 性能類別	0.438 (11.11)	0.500 (12.70)	厚度 0.451 IN.
1/2 性能類別	0.469 (11.91)	0.531 (13.49)	厚度 0.483 IN.
9/16 性能類別	0.531 (13.49)	0.594 (15.08)	厚度 0.547 IN.
19/32 性能類別	0.563 (14.29)	0.625 (15.88)	厚度 0.578 IN.
5/8 性能類別	0.594 (15.08)	0.656 (16.67)	厚度 0.609 IN.
23/32 性能類別	0.688 (17.46)	0.750 (19.05)	厚度 0.703 IN.
3/4 性能類別	0.719 (18.26)	0.781 (19.84)	厚度 0.734 IN.
13/16 性能類別	0.781 (19.84)	0.844 (21.43)	厚度 0.788 IN.
7/8 性能類別	0.831 (21.11)	0.919 (23.34)	厚度 0.849 IN.
1 性能類別	0.950 (24.13)	1.050 (26.67)	厚度 0.970 IN.
1-1/8 性能類別	1.069 (27.15)	1.181 (30.00)	厚度 1.091 IN.
1-1/4 性能類別	1.188 (30.16)	1.313 (33.34)	厚度 1.213 IN.

[1] 當板性能類別為 13/16 或少於 13/16，厚度要求是基於一個公差±0.8 mm (1/32 in.)。當板性能類別大於 13/16，厚度要求是±5%，除非厚度偏差是通過試驗來確定。

[2] 對於標籤，簡稱為"性能類別"，PERF CAT，CAT 或類別都可以。

[3] 板類製造商符合 5.2.1.2 要求都可提供的任何產品的厚度值標示。性能類別小於 9/16 的標示厚度至少要高於最小值 3%。對於 PS1 砂光的板類，建議的大於或等於 9/16 性能類別厚度的標示是指最小值。

附錄 D (非強制性)

標示使用指南

基於統一的包裝和標籤規定 NISI 130 v2009 手冊

D1 總述

D1.1 用於出售時，板的標籤應符合規定要求。本附錄提供可應用到板的指導要求。

D2 範圍和定義

D2.1 除了包裝出口，還有消費者類和非消費者類包裝要求。

D2.1.1 消費者包裝

[A]包裝的性能通常是通過零售銷售機構生產或分配出售手段為個人運用或使用個人運用為目的，或服務的運作通常是在家庭方面或與個人財產有關。(見包裝和標籤的統一規定。)

D2.1.2 非消費者類包裝

除了消費者類包裝以外的，尤其是工業或團體使用的包裝或是批發分銷的包裝類。

D2.2 包裝和標籤之要求依統一規定應在標籤或主要展示板上顯示。

D2.2.1 標籤

任何書面、印刷或圖形內容是以貼上、塗上、固定、噴上、成型、壓紋、鑄成等方式或出現在相鄰的消費者消費商品旁或包裝上有任何商品資訊以識別品牌、或提供任何關於商品或包裝內容的資訊，除了檢查員標籤或其他非促銷內容貼上或出現在商品包裝上，其他均不可重複貼標。(見包裝和標籤的統一規定。)

備註：對於木結構用板，標籤應顯示出從工廠出貨前即已貼上或固定在板上或整束板上的標示資訊。零售時，該標籤

應能在板鄰近處顯示該資訊。

D2.2.2 主要展示板

板的部分標籤可設計提供在消費之購買時展示、說明顯示或檢視。無論主要展示板出現在哪裡，標籤上都應顯示所有有關資訊。

D3 識別與責任聲明

D3.1 板的包裝必須貼上產品標識和廠家。

D3.2 產品識別

消費者產品方面其產品名稱應包括在主要展示板上，對非消費者而言則貼在包裝的外面（見消費者類和非消者費類包裝和標籤的統一規定）。消費者類的包裝產品標識應平行於包裝品放置時的基部方便看到。(見包裝和標籤統一規定。)

D3.3 產品責任

包裝的標籤上應包含公司名稱。（見包裝和標籤統一規定。）

D3.3.1 公司的識別標籤上應包含國家，城市，郵遞區號。（見包裝和標籤統一規定。）

D4 申報數量

D4.1 以下申報數量的指導是基於對消費者類包裝的要求。括弧內的差異是基於非消費者類包裝的要求。

D4.2 數量應以每一單件所聲明的重量、長度和/或單位尺寸表示，除非該件之聲明已具有完全資訊，如果對一特別商品常使用一個名稱表示其數量，且已有一個穩定的一般消費量及交易慣例，這種作法可提供準確及適當的產品數量資訊。（見包裝和標籤統一規定。）（對非消費者類包裝則沒有此種附加要求。非消費者類包裝只需建立計數和貿易慣例要求。）（見包裝和標籤統一規定。）

D4.3 一般規則

D4.3.1 尺寸數量之申報必須以公制單位（米，釐米，毫米）和英吋-磅系統單位（碼，英呎，英吋）（見包裝和標籤統一規定。）同樣的規定也適用於非消費者類包裝，可以同時或任選公制單位和英吋-磅單位使用。（見包裝和標籤統一規定。）尺寸數量用最大整數單位表示。

公制單位的餘數用小數表示。（適用於非消費者類包裝）（見包裝和標籤統一規定。）

長度如果小於 1 m，則用 cm 和 mm 測量。（見包裝和標籤統一規定。）（不適用於非消費者類包裝）。

長度如果大於 1 m，則加用小數表示。（見包裝和標籤統一規定。）（不適用於非消費者類包裝）。

公制單位應保留 3 位數，但小於 100 mm 或 cm 可顯示 2 位數。任何情況下，零出現在小數點右邊時不需要顯示。（見包裝和標籤統一規定。）（適用於非消費者類包裝）。

英吋-磅系統的餘數單位以分數或小數表示最大的整個單位或下一個較小單位。參見包裝和標籤的統一規定。

長度小於 1 ft 則以表示參見包裝和標籤的統一規定。（不適用於非消費者類包裝）。

如果長度大於 1 ft，最大長度是表示的整個單位(yd 或 ft)剩餘以英寸及分數表示或是 ft 或 yd 的分數表示。參見包裝和標籤的統一規定。（不適用於非銷售類包裝）。

小數保留不要超過 3 位。（見包裝和標籤統一規定。）（不適用於非消費者類包裝）。

D4.3.2. 雙尺寸商品的特別規定(非消費者類沒有類似的規則)

必須用公制和英吋-磅單位表示。如商品在使用時其長度及寬度比較重要且清楚的顯示在標籤上則不須要申報該商品的面

積。(見包裝和標籤統一規定。)

如果面積是 37.1 m^2 (4 ft^2) 或更大，在長度和寬度方面，對最大的單位而言，該雙尺寸商品的寬度約 10 cm (4 in.) 以下，英吋-磅的寬度應表示線性英吋和分數，長度應用最大的整數單位 (yd 或 ft) 來表示，並以 yd 或 ft 的分數表示其餘數，也可以在最大的整數單位表示其後再以 in.表示或者以 in.表示其後再以最大整體單位表示。小於 2 ft 的英吋磅的尺寸可以以 in.表示。(見包裝和標籤統一規定。)

例：5 cm×9.14 m (2 in.×10 yd)或

5 cm×9.14 m (2 in.×10 yd) (360 in.)或

5 cm×9.14 m (2 in.×360 in.) (10 yd)

D4.3.3 所需數量的說明可包含一項或多項重量，尺寸和數量的補充說明，且這些說明不僅可出現在主展示板上。產品包裝上不得包含任何在數量上的誇大性的補充聲明。(如"巨型"夸脫、"大"公升、"全"加侖、"至少"或類似的詞)。(見包裝和標籤統一規定。) (不適用於非消費者類包裝)。

D4.3.4 任何情況下，數量說明中都不得包含"至少"、"不低於"或其他如"大約"的不確定詞。也不得在重量，尺寸和計數上出現"巨型"、"巨大"、"全滿"或類似性誇大的詞。(見包裝和標籤統一規定。)(不適用於非消費者類包裝)。

D5 特例放置

D5.1 總則

出現在包裝上的所有資訊均須以中文標注，並且字母和數字的大小、類型、形式及顏色須突出，背景顏色也要突出。文字需清晰可讀性高。(見包裝和標籤統一規定。)

D5.2 位置

在主展示板的底部佔用 30%的區域作為標記包裝數量的位置。（見包裝和標籤統一規定。）

D5.3 字體類型和規格

包裝上的數量文字字型需大而清晰。（見包裝和標籤統一規定。）

D5.4 色彩對比

包裝上的數量說明應與背景顏色形成顯著對比。（見包裝和標籤統一規定。）

D5.5 空白區域

數量說明的周圍應避免印刷：(a)上下空出至少一個字體高度的空白(b)左邊和右邊，空出比一個漢字兩倍的寬度空白。（見包裝和標籤統一規定。）

D5.6 平行的數量說明

為了清楚的顯示數量說明，應將說明平行品項於名稱說明或是平行包裝安放的基部。（見包裝和標籤統一規定。）

D5.7 數字和文字的高度和比例

數字和文字所占區域最低為 2580 cm^2 或高度大於 1.2 cm 每個分數字母的高度必須滿足標準中最低高度的 1/2，任何文字或數字高度不得超過其寬度的 3 倍。（參看包裝和標籤的同意規定。）

附錄 E (非強制性)

綠色建材的木結構板

E1 總述

人們越來越重視全球意識到保護環境的重要性。通常都是以綠色作為表述，因此有必要進一步認知木材是環境友善的或是綠色建材。木質結構用板，系廣義的木製品系列中的成員，具有多元的綠色屬性和被認為是環境友善產品。

E2 木材的綠色屬性

太陽能–由樹葉收集太陽能，將大氣中的二氧化碳提取並結合由樹木根部吸收的水分和養分，以光合作用形成複合的空心纖維素纖維並緊固在木質素之間。

再生性–當成熟的樹木收穫後，由年輕的樹木取代，故木材資源再生。這種自然更新可以永續下去，只要有充足的水源,二氧化碳和陽光。

永續發展–透過負責任的森林管理，森林資源能持續在遠遠超過收穫的水準上。負責任的森林管理是減少木材從森林的開採時對不良環境衝擊的關鍵。（美國森林學會(SAF)，www.safnet.org）

能源消耗–研究表明，木材消耗能量比其他結構材料低。在管理森林、伐木、木材加工成各種終端產品和運輸木材成品至工地的能源消耗相對較小。（可再生工業材料的合作研究 www.corrim.org）

碳存涵–科學證據表明，大氣中二氧化碳含量的增加是造成加速氣候變化的原因之一。樹木透過光合作用吸收大氣中的二氧化碳，以有機物質方式將碳儲存並釋放剩餘的氧氣回大氣層。平均一顆典型的樹透過光合作用，每生長 1 立方呎材積可吸收相當於 56 磅的二氧化碳，同時生產相當於 45 磅的氧氣。（引述自愛丁堡中心的碳管理）

生命週期–生命週期評價(LCA)是很重要的,因為它量化建築產品或系統在每個階段如何影響其生活的環境，包括提取、生產、安裝、使用和廢棄處理或再生使用。(國際標準組織 ISO 14040、14040 和 14042)

幾個 CORRIM 報告證明這些屬性並提供大量的科學資料可支持生產木材產品對環境的衝擊影響相對最小。

E3 永續森林管理計畫

有四種公認的永續森林管理計畫且在北美地區有相近的林地管理面積如下所示:

加拿大標準協會(CAN / CSA-Z809)，(1.92 億英畝)www.csa—international.org/product_areas/forest_products_marking

永續林業倡議®(SFI)，(1.43 億英畝)www.sfiprogram.org

森林管理委員會(FSC)， (8200 萬英畝) www.fscus.org

美國林場系統(ATFS)(2700 萬英畝)www.treefarmsystem.org

所有這些永續森林管理計畫旨在確保林業實務能對環境負責、對社會有益，而經濟上可行的方式。

CSA、FSC 和 SFI 專案目前在木材產品上有產品標示認證的準則。每個專案對生產設施都有一個系統可追蹤纖維的百分比是源于認證的森林。

E4 主要綠色建築評級系統

為考量和量化建築施工對環境的影響發展出三大綠色建築評級系統，包括：

綠建築倡議(GBI)綠地球：此為新商業建築評級系統施工的，且已核定為 ANSI 標準。www.thegbi.org

國家綠建築標準：此為一個專案用於住宅施工評級且已核定為 ANSI 標準,並由 ICC 及 NAHB 共同贊助的標準。www.nahbgreen.org

USGBC LEED™包括四個不同的評級，包括 LEED 新建築，LEED ™現有建築物(在裝修)；LEED™商用室內裝修和 LEED™住宅。
www.usgbc.org/LEED
每一個專案考慮各種環境因素的衝擊，常達到綠色評級門檻即給予相對應的配分。
這些評級系統雖然有相似之處也有差異，會影響木製品產業。GBI 綠地球和國家綠建築標準以木材為可再生資源有獎勵分配，因為木材產品是從四個森林認證專案計畫伐採且使用 LCA 比較建築材料和建築系統。USGBC LEED™程式只獎勵可在 10 年收獲週期內再生的產品以予配分，從而排除大多數結構用木材產品，且只有獎勵以予配分從 FSC 認證的森林，也不考慮 LCA 作為基於科學的評估工具。

附錄 F (非強制性)

甲醛

F1 總述

甲醛是一種由碳，氧和氫組成的天然化學成分。來自於人體和動物、植物。也可以經過燃燒形成為一種廣泛用於製造許多消費產品的工業化學品。更多有關甲醛和室內空氣相關的健康問題請參閱 www.epa.gov / formalde.html。

F2 甲醛規定

F2.1 沒有國家或規定對 PS 2 結構用板的甲醛排放進行明確規定。這是因為 PS 2 結構用板甲醛排放十分低。

F2.2 美國住房和城市發展部法規 24 CFR 3280 的預鑄木造房屋規定包括§3280.308"木材產品甲醛排放控制"，有對粒片板和合板甲醛排放量的處理。該規定有訂定限制甲醛排放水準和持續的評估需求如下：

(a) 產品認證和持續驗證：要被安裝在預鑄房屋的合板、粒片板的材料，當所使用的膠合劑或是板表面塗料含有甲醛而不是酚醛樹脂系列時，必須由經國家認可的實驗室,進行測試。

(b) PS 2 合板主要用酚醛樹脂膠合劑，得不受住宅和城市發展部的要求，其他 PS 2 結構用板類則未明白載入該項要求。

F2.3 (http://www.arb.ca.gov/research/indoor/formaldehyde.htm) 加州空氣資源委員會(CARB)複合木材產品空氣毒性的控制措施

有關複合木材方面 CARB ATCM 規範於 2009 年 1 月 1 日批准實施。此標準的範圍是粒片板、中密度纖維板(MDF)和闊葉樹合板。標準中的§93120.1 節"定義"明確排除了 PS 2 結構用板和其他結構用木材產品如下：

"複合木材產品"是指闊葉樹合板、粒片板和中密度纖維板。"複合

木材產品"並不包括在合板中指定的"自願性產品標準—結構用合板"(PS 1-07)中指定的硬質纖維板及結構用合板和"自願性產品標準-木質結構用板類性能標準"(PS 2-04)中指定的"結構用複合木材產品評估標準規範"(ASTM D 5456 - 06)的結構用複合材，和"結構用集成材"(ANSI A190.1 - 2002)的定向粒片板及集成材，和指接材或是加州車輛規範(休閒車除外)中 430 節所定義的新車內裝的複合木質產品，和火車車廂、船隻、航太載具或飛機。

F2.4 複合木材法案甲醛標準

2010 年 7 月 7 日簽署了複合木材的甲醛標準成為法律，並於 2013 年生效。對於 PS 2 板類，該法律和 ATCM CARB 複合木材相同(參見 2.3)。PS 2 板類是複合木材甲醛標準的免檢板。

更多詳細資訊請參閱：http://www.govtrack.us/congress/bill.xpd?bill=s111-1660.

F3 結構用板的甲醛排放

F3.1 APA 的"結構用板和甲醛"報告 SPE-1040 提供了甲醛排放關資訊。

1. APA-The Engineered Wood Association

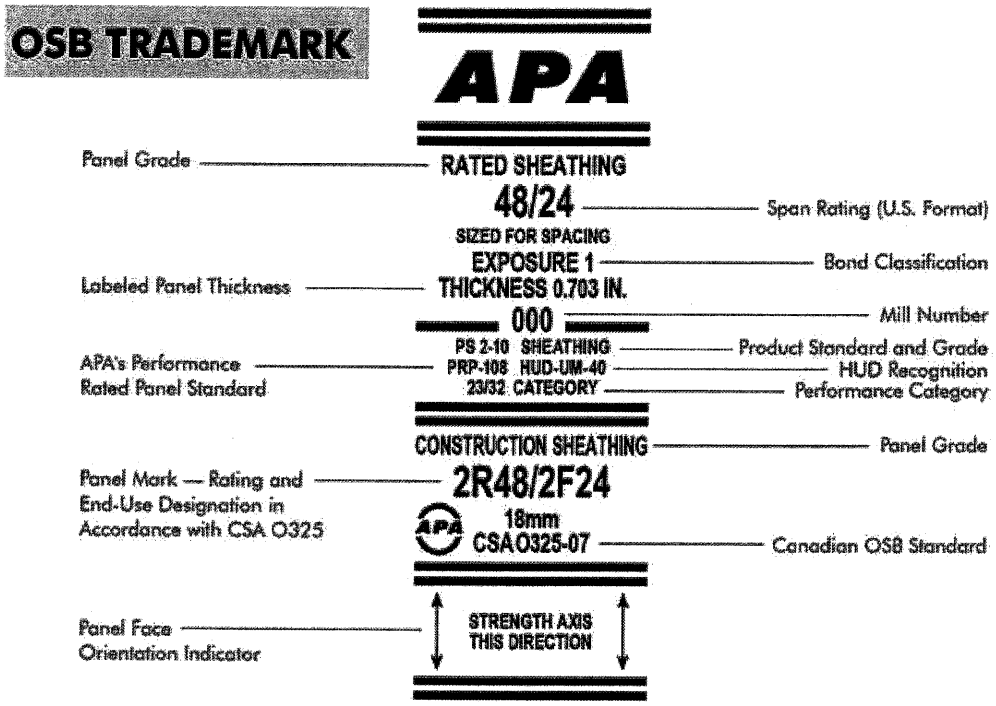

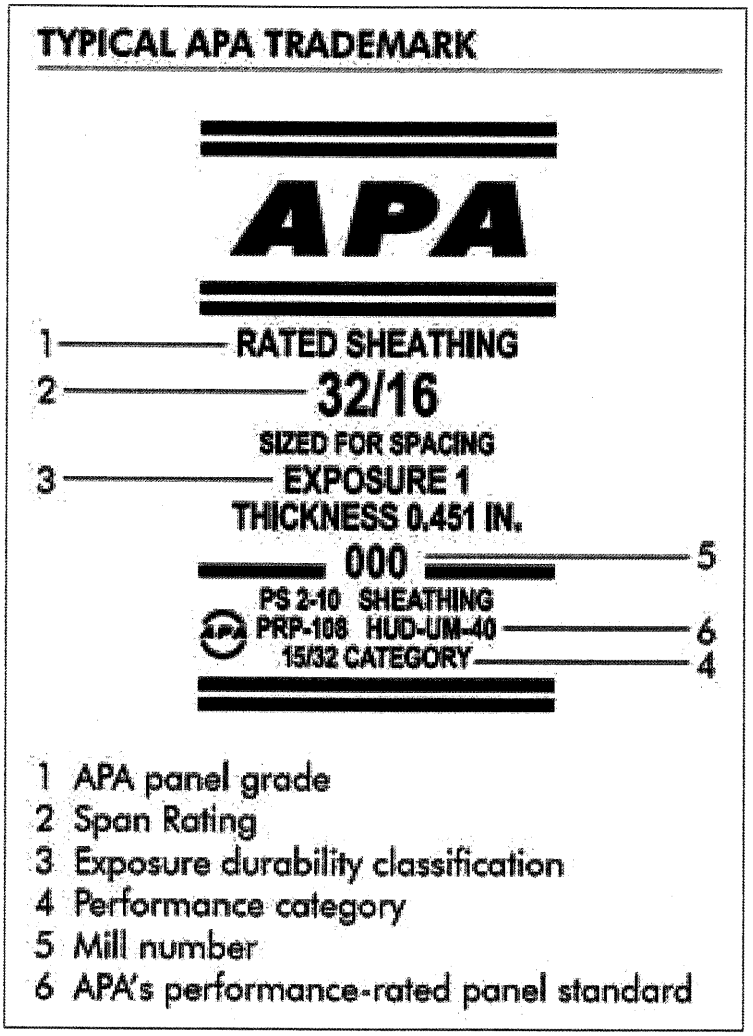

2. PFS-TECO

MANUFACTURER
INFORMATION

TECO
TESTED

PS 2 - XX
EXPOSURE 1
FLOOR SPAN®
20 OC
19/32 CATEGORY

STRENGTH AXIS
THIS DIRECTION

MILL NO.

THICKNESS 0.563 IN

3. Timber Products Inspection

AUDITED BY
TP®

PS 2-10
EXPOSURE 1
SINGLE FLOOR SPAN
23/32 CATEGORY
24 oc
SIZED FOR SPACING

CLIENT
MILL XXX

THICKNESS 0.703 IN.

AUDITED BY
TP®

PS 2-10
EXPOSURE 1
SHEATHING SPAN RATED
23/32 CATEGORY
48/24
SIZED FOR SPACING

CLIENT
MILL XXX

THICKNESS 0.703 IN.